C 39.206 :T 73

A UNITED STATES DEPARTMENT OF COMMERCE PUBLICATION

TRIM AND STABILITY GUIDE

For Container and Barge Carrying Ships

U.S. DEPARTMENT OF COMMERCE
Maritime Administration

TRIM AND STABILITY GUIDE

For Container and Barge Carrying Ships

U.S. DEPARTMENT OF COMMERCE
Peter G. Peterson, Secretary
James T. Lynn Under Secretary

Maritime Administration
Robert J. Blackwell, Assistant Secretary
for Maritime Affairs

JULY 1972

For sale by the Superintendent of Documents, U.S. Government Printing Office, Washington, D.C, 20402—Price $1.00

U. S. Depository Copy

Digitized by the Internet Archive
in 2012 with funding from
LYRASIS Members and Sloan Foundation

http://archive.org/details/trimstabilitygui00wals

FOREWORD

The introduction of new modes and concepts in transporting waterborne commerce, such as roll-on/roll-off, container and barge carrying ships, has created the need for additional training of merchant marine personnel.

In order to maintain the level of competence demanded by these complex and sophisticated ship designs, a high degree of technical knowledge will be mandatory. Among these technical requirements, the capability of maintaining ships' stability is of major importance.

In preparing this Guide, the author has undertaken the task of putting into seafarer's language the proper use of the ship's Trim and Stability Book and the function and methods used in computing the mathematical formulas required in determining trim and stability, longitudinal strength, forces generated by rolling and pitching, and use of anti-roll tanks. The Guide is not intended to replace the ship's Trim and Stability Book.

This publication has been prepared as an instructional guide by the Maritime Administration in its continuing effort to assist the maritime industry in advancing the technological aspects of ship operation in terms of safety, efficiency and economics.

ROBERT J. BLACKWELL
Assistant Secretary
for Maritime Affairs

ACKNOWLEDGEMENT

This "Guide" has been prepared for the Merchant Marine deck officer serving on the efficient and complicated container and barge carrying ships. It is intended to improve his ability to safely operate these complex vessels by providing a fresh look at the following subjects:

a. trim and stability
b. longitudinal strength
c. anti roll tanks
d. forces generated by rolling and pitching
e. use of the Trim and Stability book

This publication was written by W. Michael Walsh, Naval Architect and Master Mariner, from the Office of Ship Construction, Maritime Administration. The project was initiated and managed by Howard Patteson of the Office of Maritime Manpower, Maritime Administration. The preliminary review was rendered by Ronald K. Kiss, and guidance and advice was tendered throughout by L. Franklin Robertson, both Supervisory Naval Architects, Office of Ship Construction, Maritime Administration. The project was sponsored by Arthur W. Friedberg, Chief, Office of Maritime Manpower, Maritime Administration. The Maritime Administration acknowledges with sincere appreciation the assistance of the following qualified authorities from other organizations whose review and critique contributed substantially to the publication:

Professor Norman A. Hamlin, Webb Institute
William H. Garzke, Naval Architect, G.G. Sharp, Inc.
Captain M. B. Lemly, M.M.T., U.S.C.G.
Captain J. N. Caffrey, M.V.P., U.S.C.G.
Cdr. R. C. Hill, M.M.T., U.S.C.G.
Lt. Cdr. D. L. Folsom, R&D, U.S.C.G.
Captain S.F. Sammis, Chief Surveyor, National Cargo Bureau
Professor A.R. Philbrick, Texas Maritime Academy
Asst. Professor R. W. Armstrong, Texas Maritime Academy
Lt. Cdr. Joseph F. Nichols, Maine Maritime Academy
J. M. Alanko, Asst. Chief of Construction, U.S. Lines
R. O. Patteson, Master Mariner, Consultant to U.S. Lines

In addition this book would not have been possible without the skillful efforts of the drafting section, secretarial personnel, and Mr. L. Johnson of the Office of Ship Construction, Maritime Administration.

CONTENTS

		PAGE
FOREWORD		iii
ACKNOWLEDGEMENT		v
PART I – A STABILITY AVAILABLE		
Section A-1	Review of Math	1
	Familiarity w/Trim & Stability Book	5
	Quiz	5
Section A-2	Calculation of KG	6
	Calculation of Transverse Metacenter KMt	9
	Calculation of GMt	12
	Fundamentals of Transverse Stability	13
Section A-3	Stability at Large Angles of Heel	
	– Righting Arms	17
	– Curves of Statical Stability	18
	– Cross Curves of Stability	21
	– Form Gain	21
Section A-4	Free Surface	23
Section A-5	Rolling Period	26
Section A-6	Pitching	29
Section A-7	Trim	30
Section A-8	Ballasting	32
PART I-B SUBDIVISION		
Section B-9	Floodable Length	36
PART I-C SHIP OPERATION		
Section C-10	Anti Roll Tanks	39
Section C-11	Container Ship Operation	42
Section C-12	Barge Carrying Ship Operation	51
Section C-13	Damaged Stability	54
PART II TRIM & STABILITY BOOK		
Section – 14	Instructions & Routine Operating Instructions	66
Section – 15	Tank Capacity & Free Surface Table	68
Section – 16	Gain in GMt By Ballasting Table	69

PAGE

Section – 17 Trim Table 71
Section – 18 Hydrostatics Table 73
Section – 19 Container Stowage Table–Calculation 75
Section – 20 Lighter Stowage Table 76
Section – 21 Trim & Stability Sheet – (Long Form) 78
Section – 22 Longitudinal Strength 81
Section – 23 Short Form (z-Nomogram) 87

PART III PROBLEM SOLUTION

Section – 24 Mechanical & Electronic Stability & Longitudinal Strength Calculators 95
Section – 25 Problems of Ship Operation 97

STABILITY AVAILABLE

PART I – A-1 REVIEW OF MATH

Review of Math

Because stability is dependent on the position of the vertical center of gravity, it is important to be able to locate the center of gravity by means of calculations.

The center of gravity or centroid is a point and it may be calculated for an area, volume or weight. The center of gravity of a system of weights is that point at which we may regard the whole system as being concentrated.

The center of gravity is located vertically, longitudinally, and transversely.

The calculation of the Center of gravity is determined by the principle of moments.

What is a moment?

It is a weight multiplied by a distance or an area or volume multiplied by a distance.

Distance is measured from center of gravity or centroid of the weight, volume or space to axis that moment will be taken about.

As an example:

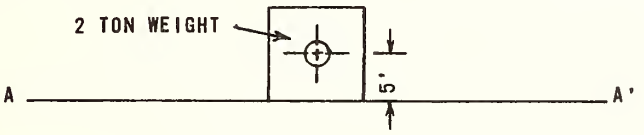

FIGURE 1

Moment of W about AA′ is = 2 tons x 5′ = 10 ft. tons

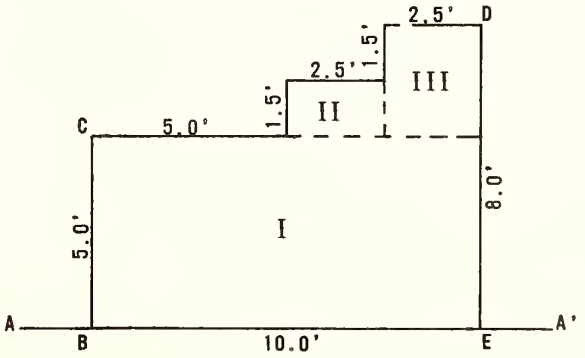

FIGURE 2

What is the moment of area BCDE about AA′?

Break up figure into 3 increments called I, II, III.

The CG of I will be 2.5′ above AA′.
The CG of II will be 5.75′ above AA′.
The CG of III will be 6.5′ above AA′.

Space	Area	Lever	Moment
I	5 x 10 = 50 ft.^{2}	x 2.5′ =	125.0 ft.^{3}
II	2.5 x 1.5 = 3.75 ft.^{2}	x 5.75′ =	21.5 ft.^{3}
III	2.5 x 3.0 = 7.5 ft.^{2}	x 6.5′ =	48.7 ft.^{3}
	61.25 ft.^{2}		195.2 ft.^{3}

Moment is 195.2 ft.^{3}

Area is 61.25 ft.^{2}

To find height of CG about AA′ divide area into moment

$$\frac{195.2 \text{ ft.}^3}{61.25 \text{ ft.}^2} = 3.18' \text{ above AA}'$$

The center of gravity of a system of weights is that point at which we may regard the whole system as being concentrated.

The center of a space in a liquid such as the center of the volume displaced by a ship's hull is the point at which we may assume the whole upward buoyant force as being concentrated.

The deck officer must be familiar with math to perform the following:

Calculation of GM
Calculation of KM
Calculation of KG
Calculation of Free Surface
Calculation of Trim
Understanding of Damage Stability
Ability to read and apply Curves of Form,
Cross Curves of Stability & Floodable Length Curves
Calculation of Stability by use of Long Form
Calculation of Stability by use of Short Form
Calculation of Stability by Stabiloguage

Theory of Moments

Simply, almost all stability calculations involve the theory of moments. Basically the moment is an area, volume or weight multiplied by a distance about an axis. The distance is measured from the center of gravity of the area, volume, or weight to the axis. The moment may be measured as ft tons i.e. weight x distance, ft^4 i.e. volume x distance, ft^3 i.e. area x distance.

TABLE OF CENTROIDS (CG)
COMMON GEOMETRIC SHAPES

FIGURE 3

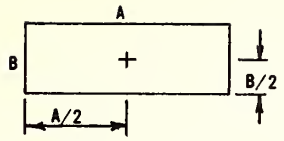

RECTANGLE

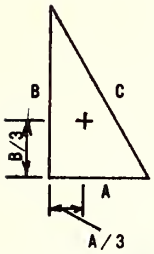

RIGHT TRIANGLE

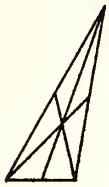

TRIANGLE C.G.@ INTERSECTION OF MEDIANS

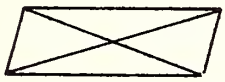

PARALLELOGRAM C.G.IS @ INTERSECTION OF THE DIAGONALS

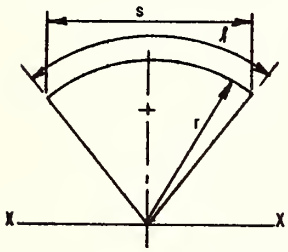

CIRCULAR SECTOR C.G.$=\frac{2rs}{3l}$ ABOUT X-X AXIS

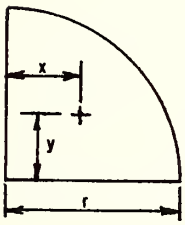

QUARTER CIRCLE C.G.=.424r

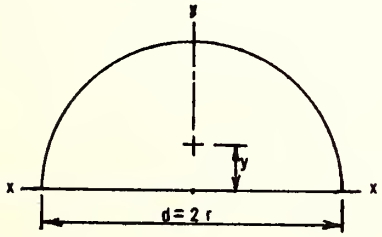

SEMI CIRCLE C.G.ABOUT x=0
ABOUT $y=\frac{4r}{3\pi}$ or .424r

PROBLEMS

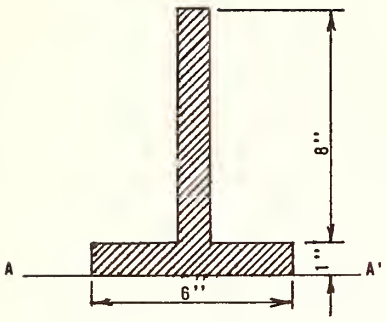

How far is centroid (CG) above base A-A'

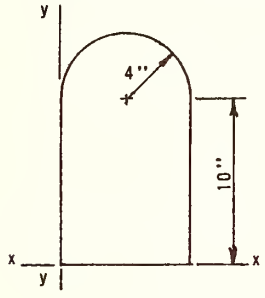

Determine the coordinates of the centroid of the area with respect to x & y axes

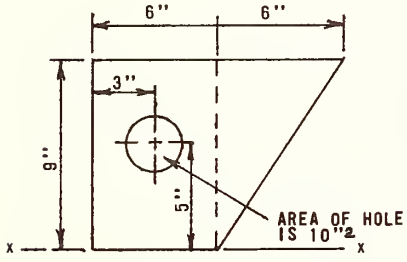

A hole having an area of $10''^2$ is cut out of the plate whose dimensions are shown in the figure at left. Locate the centroid of the remaining area with respect to the given axes.

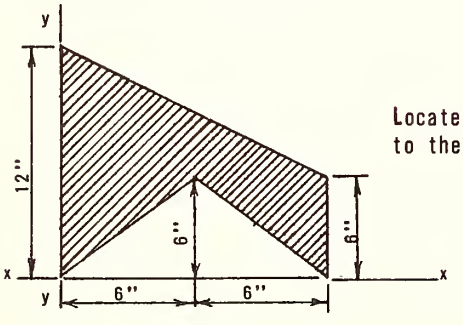

Locate the centroid of the shaded area with respect to the x & y axes

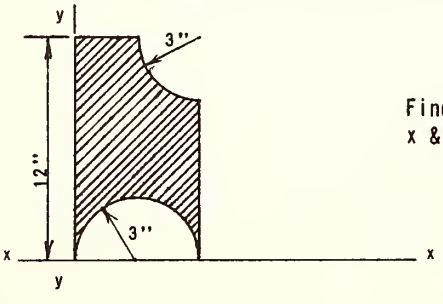

Find the coordinates of the shaded area with respect to the x & y axes.

FAMILIARITY W/TRIM & STABILITY BOOK

The Trim and Stability Book is prepared by the contractor for the use of the ship's personnel. The book has been prepared to enable operating personel to determine the vessel's operating metacentric height (corrected GM for any condition of loading or operation). The book will be tailored to the ship, the trade that it will be in, and the cargoes it will carry. In general the contents of the book will be as follows:

1. The books will show loading conditions that will represent any cargo loading having tonnages and vertical centers of gravity similar to those shown.

2. The book will contain instructions for operation. Including instructions for computation of vessels stability & trim (long form and short form).

3. Routine operating instructions regarding ballasting, tankage and cross connections will also be shown.

4. Instructions for carriage of grain and bulk cargoes and free surface corrections.

5. A table of hydrostatics vs. draft.

6. Trimming table showing profile of ship and containing a trim problem worked out.

7. Table of "Gain in GM by ballasting" shown on a tank vs. displacement basis.

8. "Composite curve of GM required" laid out for GMt required in feet vs. draft.

9. Tank capacity and free surface table. Including VCG, LCG & F/S for slack & 98%-5° heel conditions.

10. Cargo space capacity table including name of space, location, capacity in grain, bale, VCG, & LCG.

11. Long form loading conditions showing mean draft, VCG, LCG, KM, GMt, F/S correction, GMt corrected, trim, trimming lever, LCF location, & drafts at marks.

12. Most books contain a short form with an example calculated.

A-1 QUIZ

1. If a ship has a pair of large wing tanks that were empty should the cross connections be left open or closed?

2. When leaving port how would the GMt required be determined?

3. What is the trim lever?

4. What is the USCG's standard of GMt required based on?

5. What is the Maritime Administration's standard of GMt required based on?

6. How is the light ship KG of a ship determined?

7. A vessel floating at her light draft displaces 10,000 tons with a VCG of 28.00′. She loads 12,000 tons of cargo at a VCG of 44.00′, 123 tons of F.W at a VCG of 12.4′. 10 tons of lube oil at a VCG of 7.2′. 25 tons of provisions at a VCG of 40.0′. What is her new VCG?

8. If the KMt in the loaded condition for the ship in problem 7 is 33.70′ and the free surface correction is 15,119 ft.^{4} what is the GMt available?

9. If the trimming moment of a ship is 109,750 ft. tons by the stern and the MTI′ is 3,155 ft. tons what is the trim in feet?

10. If a ship of 27,000 tons displacement with a VCG of 31.41′ loads 336 tons of F.O in a D.B with a VCG of 2.7′ what is the GMt available?

11. What axis does the ship trim about?

A-2 CALCULATION OF KG & LCG

Before stability calculations can be made the light displacement KG must be known. This was determined by the inclining experiment.

The KG of any ship is continually changing. It may change quite quickly during operations involving loading and discharging of cargo, bunkering, and storing. At sea the KG generally changes (slowly) due to consumption of liquids, stores and ballasting. The KG might also be affected by icing, and free surface.

As cargo operations begin, every weight that is added or removed will affect the displacement and original center of gravity. In order to find the new KG the theory of moments must be applied. The position of the centers of gravity of cargo, fuel, water and stores must be estimated. Multiply each weight by the height of it's CG above the keel to obtain the vertical moment. The sum of all vertical moments is the total vertical moment. The sum of all weights is the total weight. Divide total weight into total vertical moment to obtain new VCG. (You must include the light ship weight and the moment from light ship weight x light ship KG).

$$KG = \frac{\text{total vertical moment}}{\text{total weights}}$$

Example: If we load a barge weighing 700 tons that has a VCG of 5′ with 200 tons of sand at a VCG of 2.5′ what is the new VCG of the barge?

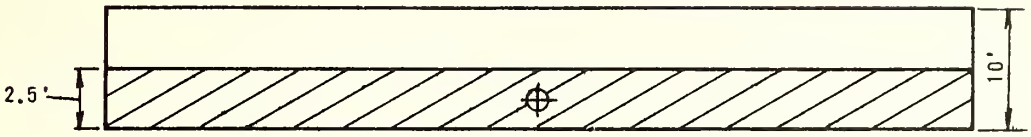

FIGURE 4

	W		VCG		vertical moment
barge	700 tons	x	5.0′	=	3500 ft. tons
sand	200 tons	x	2.5′	=	500 ft. tons
total	900 tons		4.43′		4000 ft. tons

Example: If #4 hold was loaded as follows determine the VCG.

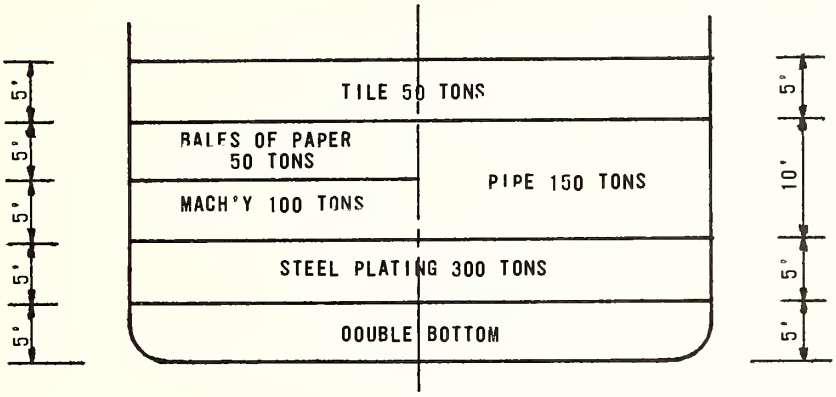

FIGURE 5

Item	Wgt	VCG	Moment
Stl. Pl.	300	7.5	2250
Machy	100	12.5	1250
Pipe	150	15.0	2250
Paper	50	17.5	875
Tile	50	22.5	1125
	650	11.92	7750

FIGURE 6

Example

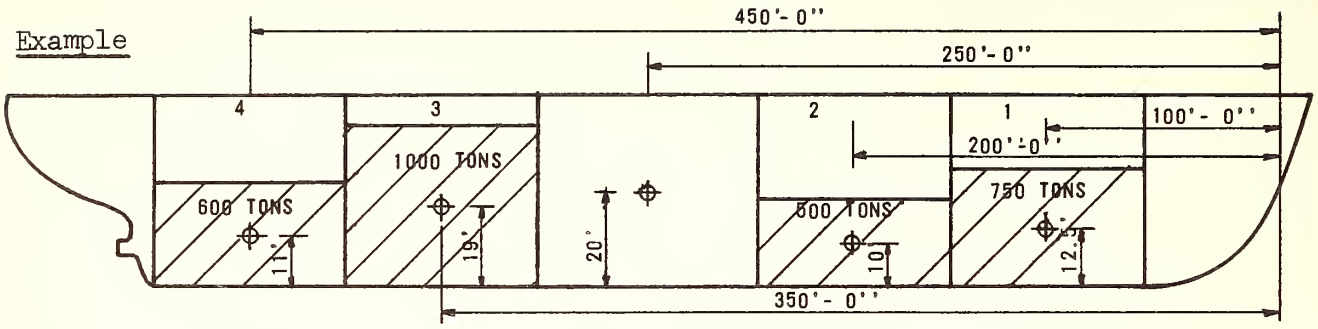

If a 10,000 ton ship with a VCG of 20′ is loaded in holds 1, 2, 3 and 4 as shown what is the VCG of ship in the loaded condition?

	W		VCG		Vertical Moment
ship	10,000 ton	x	20′	=	200,000 ft. tons
hold #1	750 "	x	12.5′	=	9,350 " "
" #2	500 "	x	10.0′	=	5,000 " "
" #3	1,000 "	x	19.0′	=	19,000 " "
" #4	600 "	x	11.0′	=	6,600 " "
	12,850 tons		18.6′		239,950 ft. tons

Example: What is the longitudinal center of gravity i.e. what is the longitudinal location of the center of gravity. (take moments about F. P.)

	W	lever	long'l moment
ship	10,000 tons	250′	2,500,000 ft. tons
hold #1	750 tons	100′	75,000 " "
" #2	500 "	200′	100,000 " "
" #3	1,000 "	350′	350,000 " "
" #4	600 "	450′	270,000 " "
	12,850 tons	256.5′ aft of F.P.	3,295,000 ft. tons

Problems

1. Attwood and Pengelly "Theoretical Naval Architecture" page 74 problem 1.
2. Define Center of Gravity

3. La Dage and Van Demert – Stability and Trim for the Ship's Officer

page 29 problem 2
page 29 problem 3
page 29 problem 4

CALCULATION OF THE TRANSVERSE METACENTER KMt

What is KMt?

If the ship is inclined a small amount up to about 7° or sometimes 10° then a vertical line passing through the new Center of Buoyancy will intersect the original vertical line at M. This M is the locus of the Center of Buoyancy or the point about which it rotates. The distance M above the keel is KMt.

Another way of saying it is to say KMt = KB + BMt.

An approximate way of calculating KB (height of center of bouyancy above keel) is to use Morrish's formula

$$KB = 1/3\,(5T/2 - V/A)$$

where T is draft in feet
V is volume of disp. in $ft.^3$
A is waterplane area in $ft.^2$

A simpler way of determining KB is to use the curves of form or table of hydrostatic properties in the T&S book.

BMt is the vertical distance from B to Mt.

It can be calculated by the following formula

where I = moment of inertia of waterplane about C.L. also known as the second moment of area, in $ft.^4$
V = volume of displacement in $ft.^3$

For a rectangular waterplane the formula is as follows:

$$I = \frac{L \times B^3}{12}$$

where L = length of waterplane
B = breadth of waterplane

To find the moment of inertia of waterplanes other than rectangular:

$$I = L \times B^3 \times k$$

where k is a constant depending upon the value of the waterplanes coefficient as follows:

Waterplane coef.	k Average
.70	.042
.75	.048
.80	.055
.85	.062

Example: Calculate the KM for a rectangular barge that has the following characteristics

length = 80′
beam = 30′
draft = 10′

$$I = \frac{lb^3}{12} = \frac{80 \times 30^3}{12} = 180{,}000 \text{ ft.}^4 \qquad V = l \times b \times d = 80' \times 30' \times 10' = 24{,}000 \text{ ft}^3$$

$$BM = I/V = \frac{180{,}000}{24{,}000} = 7.50'$$

because it is a rectangular barge

$$KB = \frac{\text{draft}}{2} = \frac{10}{2} = 5.00'$$

$$KM = BM + KB = 7.50' \times 5.00' = 12.50'$$

Example: Let us increase the beam of the barge by 15′ and see what happens:

$$I = \frac{80 \times 45^3}{12} = \frac{80 \times 91{,}125}{12} = 607{,}500 \text{ ft.}^4$$

$$V = 80 \times 45 \times 10 = 36{,}000 \text{ ft.}^3$$

$$BM = I/V = \frac{607{,}500}{36{,}000} = 16.88'$$

$$KB = 5.00'$$

$$KM = BM + KB = 16.88' + 5.00' = 21.88'$$

As a result of the increase of the beam by 50% we have increased the BM by 225% and the KM by 175%.

Example: A 68c class container ship is floating at a draft of 29′ the displacement is 28,861 tons, the characteristics are as follows:

length on waterplane	670′
beam	85′
tons per inch immersion	96.7′

Calculate the KMt and check against the hydrostatic properties in T&S book.

$$\text{waterplane coeff.} = \frac{96.7 \times 420}{670 \times 85} = .713$$

waterplane coeff. of .713, K = .044

$$I = 670 \times 85^3 \times .044 = 18{,}104{,}405 \text{ ft.}^4$$

$$V = = 28{,}861 \text{ tons} \times 35 = 1{,}010{,}135 \text{ ft.}^3$$

$$BM = I/V = \frac{18{,}104{,}405 \text{ ft.}^4}{1{,}010{,}135 \text{ ft.}^3} = 17.92'$$

Using Morrish's formula:

$$KB = 1/3\,(5/2 \times T - \frac{V}{A}) = 1/3\ (5/2 \times 29) - (\frac{1{,}010{,}135}{96.7 \times 420})$$

$$KB = 1/3\ [72.5 - 24.87] = 15.88'$$

$$KM = KB + BM = 15.88' + 17.92' = 33.80'$$

Hydrostatic properties (page 6 of 68c T&S book) shows a KM of 33.68′ for a draft of 29′.

Explanation of vertical movement of transverse metacenter: Most container and barge type carrying vessels in a light condition are particularly stiff. This means a large value of GMt.

The change in the vertical position of B is directly related to the change of draft. In a full formed cargo vessel about 0.50′ increase in KB for each 1′ increase in draft. The great value of KM at light drafts therefore must be due to a greater value of BM. At low drafts, the ratio for I/V is large. As the drafts increase the I increases at a slower rate than the V, leading to a decreasing I/V ratio. The curve of KB is nearly a straight line. This leads to the assumption that the increase in KB has almost a direct ratio with the increase in draft. The curve of KMt decreases slowly at light drafts, then is almost constant throughout its length and finally at the deepest drafts may increase slightly.

Effect of trim on KMt. The extreme trims that are possible in the operation of container and barge carrying ships have an effect on KMt. At the present time most T&S books make no effort to correct for this trim. Some curves of form have curves of change in displ. and KMt for trim. It appears likely that the USCG will insist on this data being included in future barge and container carrying ship's T&S books.

Some rule of thumb ratios for full formed cargo ships are as follows:

Gain in KM for trim by the stern
.04′ of KM/1′ of trim

Loss in KM for trim by the bow
.02′ of KM/1′ of trim

For change in KM due to trims less than 5′–

$$.1 \times \frac{B^2}{d} \times \frac{\text{trim}}{L}$$

where B = beam
d = draft
L = length of W.L.

Questions: Page 47 of Stability and Trim for the Ship's Officer by La Dage and Van Gemert. Questions 1, 3, 4, 9, 10, 11, 14

Problems: Page 48 of Stability and Trim for the Ship's Officer by La Dage and Van Gemert. Problems 2, 4, 5, 6, 7, 8, 11

CALCULATION OF GMt

The metacentric height GMT is a measure of initial stability and is a standard that we must meet in loading, discharging, ballasting, deballasting, storing or consuming stores, or any combination of these operations. It is shown in the T&S book as required GMt vs. draft and is a criteria that must be met through out the life of the ship, at sea and in port.

GMt, however, is a measure of initial intact stability, it is not stability. At all angles of inclination the measure of stability is (GZ) the righting arm. The only true meaningful standard of stability for all conditions is the righting moment.

GMt is a function of the righting moment. GMt and amplitude, determines the speed of roll. M is a fixed point at a constant displacement for inclinations up to 7° - 10°. As we lower G and increase GMt at a fixed displacement we increase (GZ) the righting arm and righting moment. The T&S book will show a GMt required vs. draft curve. This curve must be met in all loading conditions. The GMt may be calculated as follows:

$$KMt - KG = GMt$$

The GMt curve may also be checked by measuring the rolling period but we will cover this in a later chapter of the text.

Questions: La Dage & Van Gemerts, "Stability and Trim for the Ships Officer."

Page 29
Questions 3, 5, 9.

Problems: La Dage & Van Gemert's, "Stability and Trim for the Ships Officer."

Page 30
Problems 2, 3, 8.

FUNDAMENTALS OF TRANSVERSE STABILITY

When any body is in equilibrium in such a manner that if when displaced slightly in any way it returns of itself to its original position the equilibrium is said to be stable and the condition is said to be one of positive stability with respect to its original position.

Specifically stability is the tendency of a ship to return to the original position when inclined away from that position.

A freely floating undisturbed body in a still liquid is acted upon by 2 resultant vertical forces the upward force of bouyancy and the downward force of weight. The resultant of the bouyant forces of the liquid can be considered as a single force applied vertically upward through the center of bouyancy and the resultant of all the weight is a single force acting vertically downward from the center of gravity.

If the body is at rest in equilibrium the resultant forces must be equal and opposite and the center of bouyancy must be in a vertical line over and in line with the center of gravity.

If the body is displaced so that the center of bouyancy B_1 is not in a vertical line directly over or under the center of gravity G the body will not remain in that position but will move to a position such that the above conditions necessary for a body to remain at rest are fulfilled.

It may help to visualize the equilibrium of a ship by comparing it to an ordinary "rocking chair".

G is the combined center of gravity of chair and occupant.

B corresponds to the "center of buoyancy"

M is the center of curvature of the rocker and is the "metacenter" of the chair or the point that B stays under as the chair rocks.

B1 corresponds to the "center of buoyancy" shifted

BM corresponds to the "metacentric radius"

BM corresponds to the "metacentric height"

GZ corresponds to the "righting lever"
M must be above G for the chair to be stable. If one stands on the chair and grasps the back so as to bring the combined "G" higher than "M" the chair will capsize.

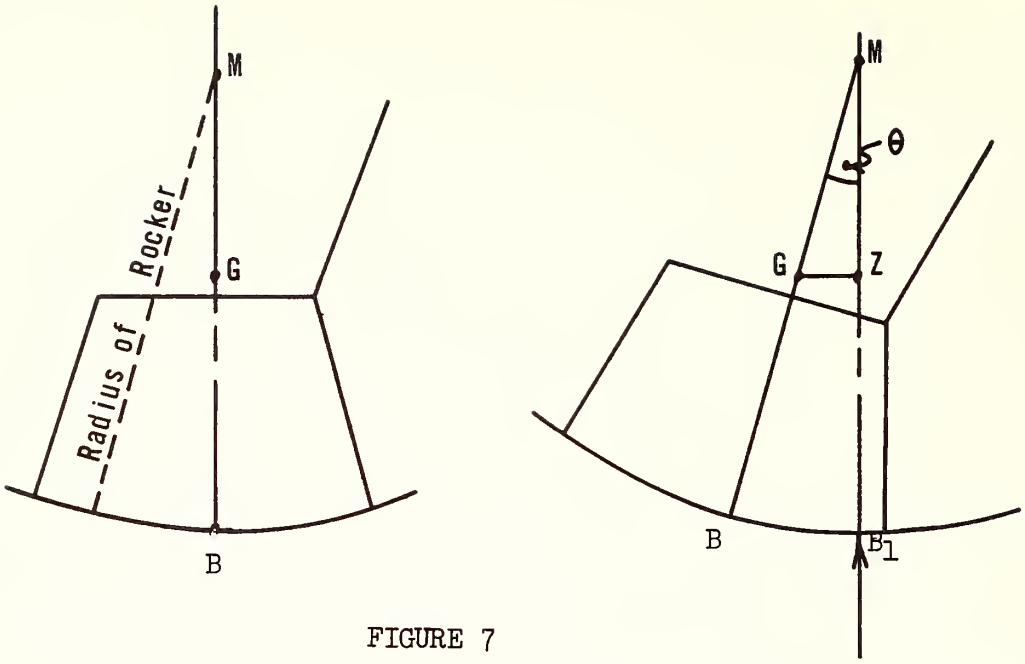

FIGURE 7

What happens when a ship heels is as follows:

Assume the ship heeled over to waterline $W_1 L_1$; "G" remains in its original position but due to the shift of a wedge of bouyancy from the emerged side of the ship to the immersed side "B" shifts transversely, as in the rocking chair such that a righting lever of GM sin θ is developed and the ship will return to the upright position when the righting moment (GM sin θ) exceeds the heeling moment.

This of course assumes that "G" is below "M" (GM positive). If the center of gravity were to be at the point "M" (or above), no righting lever would develop on heeling and the ship would be unstable and would not return to upright if heeled over by some external force.

What happens when a ship heels as a result of outside influences or on board forces see sketches on the following 2 pages.

INCLINING EXPERIMENT

FIGURE 8

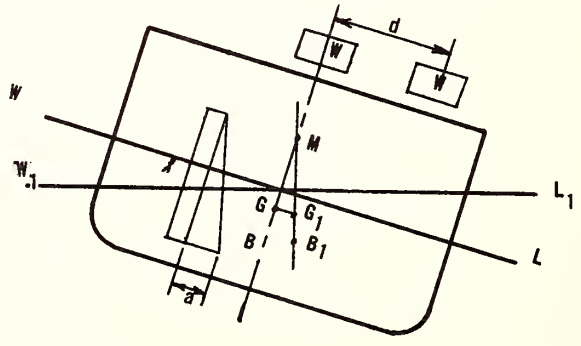

The ultimate determination of Center of Gravity (KG), Metacenter, and Lt. ship Displacement will be as a result of an inclining experiment.

"Inclining Experiment"

We know that the weight of the ship acting downward through the Center of Gravity (G) and the bouyancy acting upward thru the "Center of Bouyancy" (B) are equal and opposite forces. If we were to shift some weight transversely such that the "Center of Gravity" is moved off the C/L plane, the ship must heel to an angle where the forces are again in balance and the righting moment is equal to the heeling moment.

If the heeling moment is W x d and the righting moment is Displacement x GM sin θ we can equate these values such as:–

$$W \times d = \text{Displacement} \times GM_{\tan} \theta, \text{ or } GM = \frac{W \times d}{\text{Displacement} \tan \theta}$$

and this is the formula used when conducting the inclining experiment.

W is the inclining weight
d is the distance it is moved
θ is the angle of heel

The displacement is that measured at the time of the experiment.

All of the preceeding discussion is related to small angles of heel up to about 10° and applies only when the deck edge is not immersed.

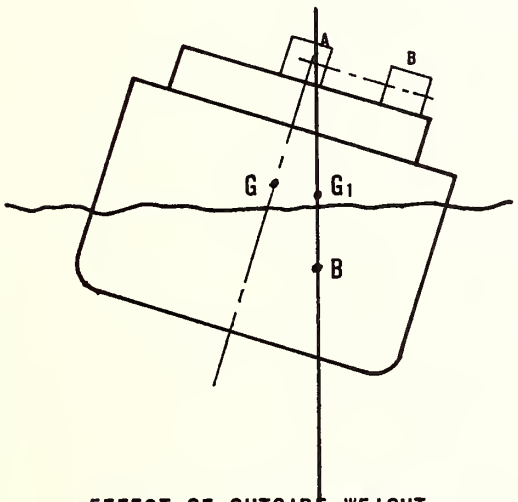

EFFECT OF OUTSIDE WEIGHT

FIGURE 9

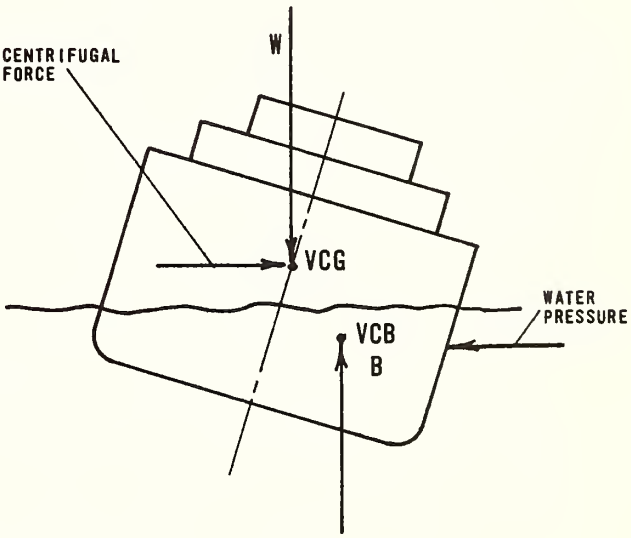

EFFECT OF A TURN

FIGURE 10

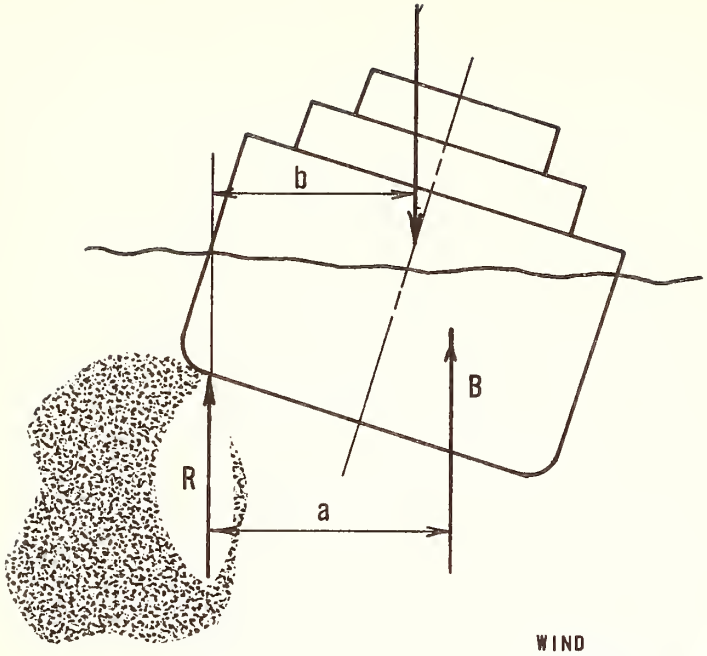

FIGURE 11

EFFECT OF GROUNDING

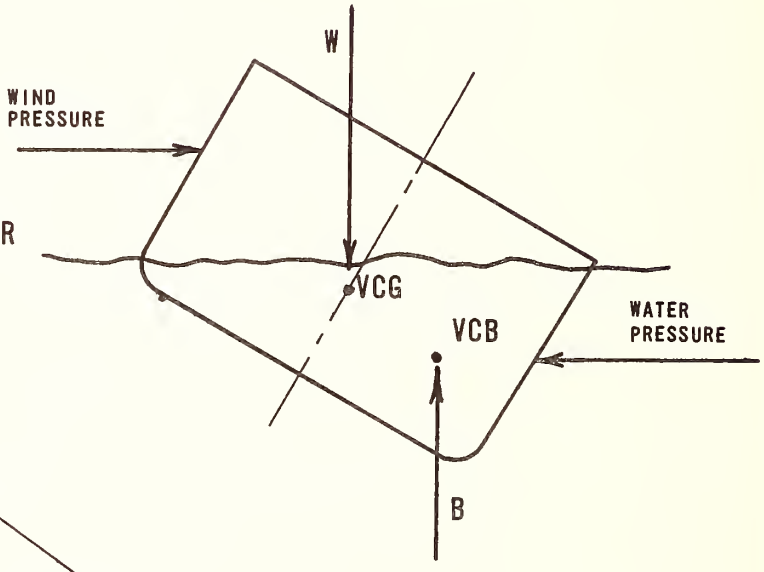

FIGURE 12

EFFECT OF WIND AND WATER

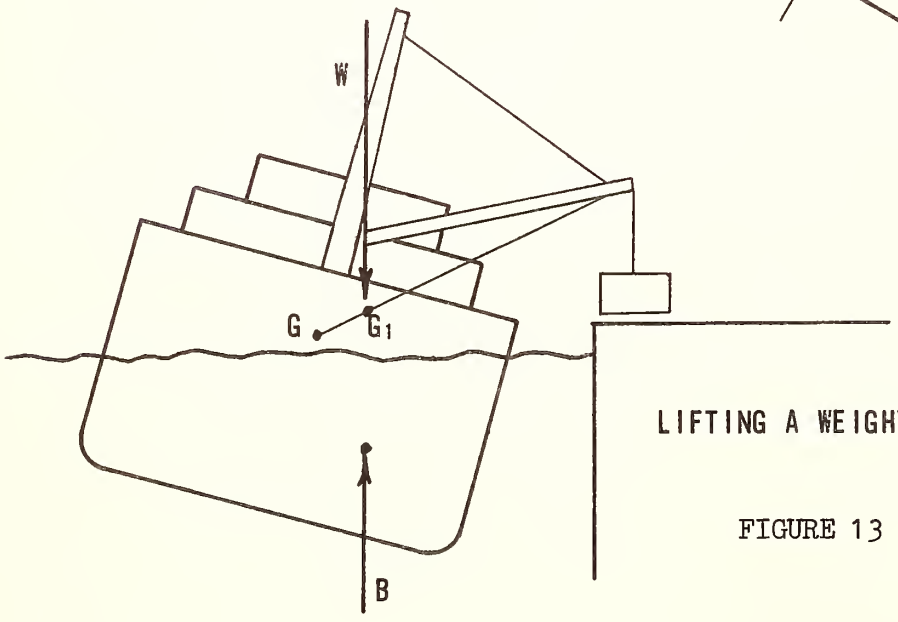

LIFTING A WEIGHT OVERSIDE

FIGURE 13

To Review

Stability is positive when "Center of Gravity" (G) is below the "Metacenter" (M). This distance between these points is called GM (transverse).

A-3 STABILITY AT LARGE ANGLES OF HEEL

Righting Arms—The righting arm may be described as the distance between the line of force thru B_1 and the line of force thru G when there is positive stability.

GZ is called the righting arm and for small angles of inclination is calculated as follows:

$GZ = GMt \sin \theta$

The righting moment or the force working against the heeling moment is —

displ in tons x GM sin θ

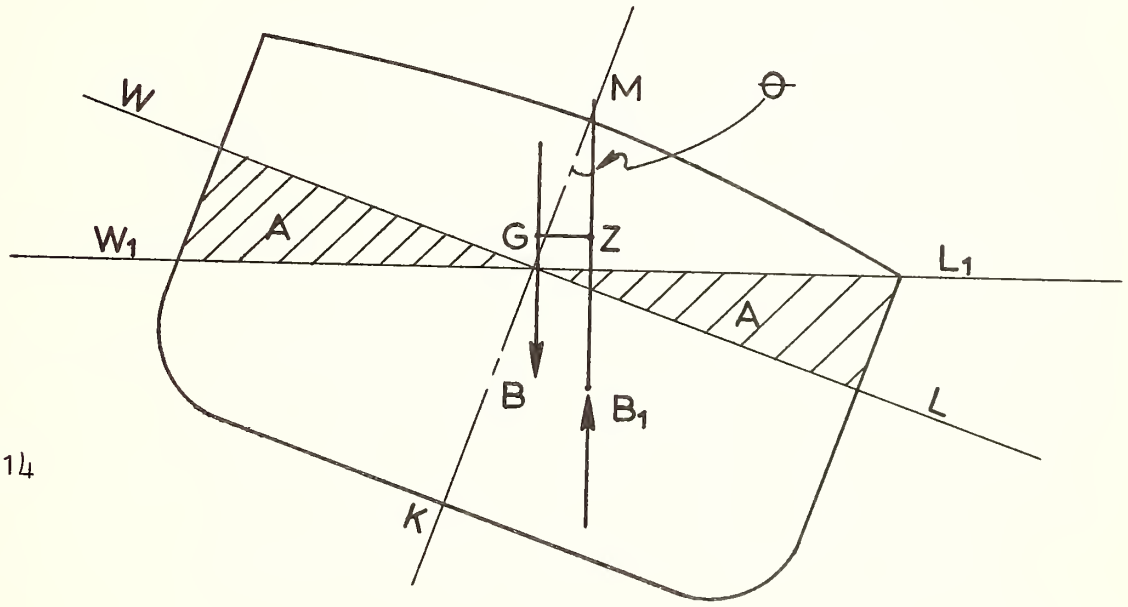

FIGURE 14

The righting moment is the true measure of the stability of the vessel.

At angles larger than 10° the effect of the form of the ship causes the center of buoyancy to shift such that the metacenter (M) does not remain in one place. The righting lever must then be determined by actual integration of the hull form at the various angles rather than by calculation of the moment of transfer of the wedges of figure 14 as is the case for small angles.

A typical righting lever diagram for a conventional ship could be as shown here.

Since the sine of the angle closely approximates the angle in radians for small angles of heel, we can draw a line from zero to the GM value at 1 radian (57.3°) and this line represents GM sine θ. The righting lever can then be considered to consist of GM sin θ plus a correction for the form of the ship.

FIGURE 15

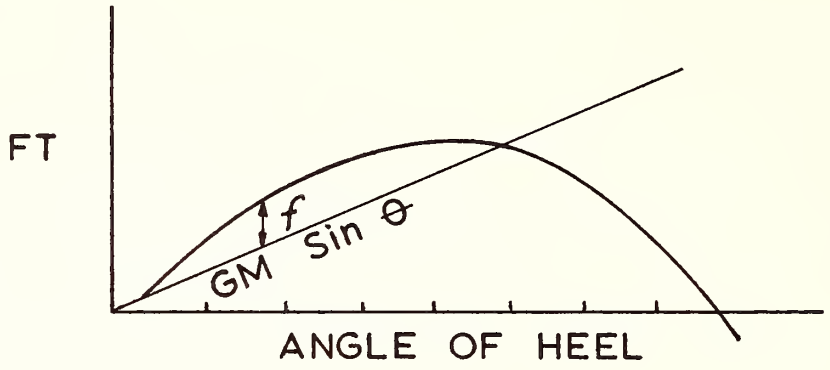

PLOT OF RIGHTING LEVER VS HEEL

Questions: La Dage & Van Gemert Chapter 1 page 11
questions 6, 7, 8, 10, 11, 15, 16.

Curves of Statical Stability:

In the operation of ships at sea it is necessary to estimate the stability of vessels at large angle inclinations. It is basically an evaluation of the force that the vessel exerts in returning to the upright. This righting moment a function of the couple expresses in foot tons the force that will be exerted to right the ship. Therefore, it is essential to know the righting arm at all times. This information is available on the Statical Stability curves which, if not on ship, should be obtained from the owners of the ship.

These curves are drawn for a range of displacements. Each curve is for one displacement and is plotted as righting arm versus angle of inclination. An assumed constant KG is used in calculating all righting arms and is chosen low enough to give a positive value of righting arms through the range of stability.

Correction to righting arms for difference in G
(Assumed G versus Actual G)

$GG' \sin \theta$

G = assumed G
G′ = actual G
sin θ = angle of inclination

If actual G is above assumed G, the correction to righting arm is subtractive.
If actual G is below assumed G, the correction is additive.

Correction to righting arms for transverse shift of G

This correction is subtractive as follows:

Lost righting arm = $GG' \cos \theta$

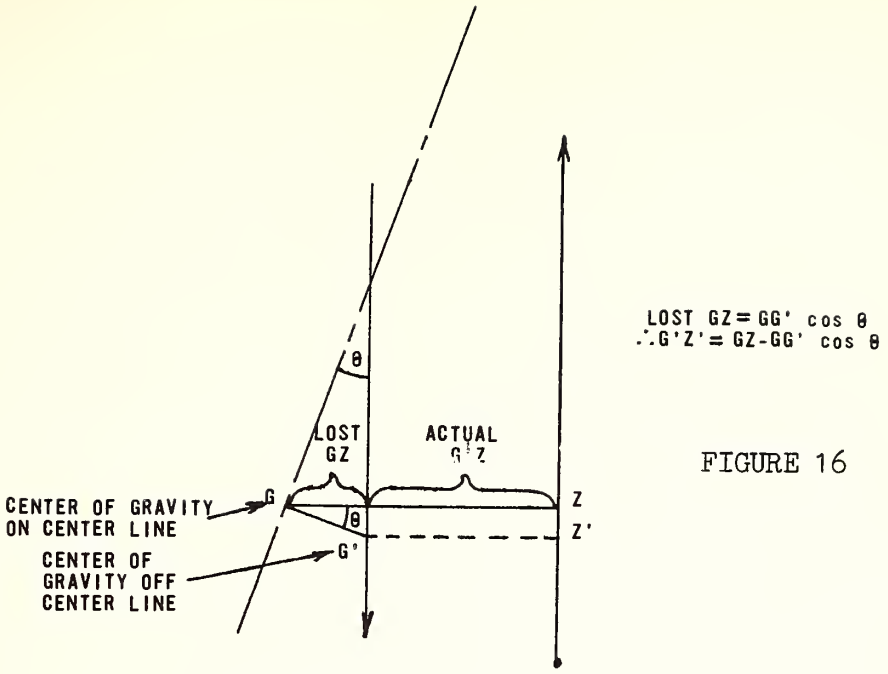

FIGURE 16

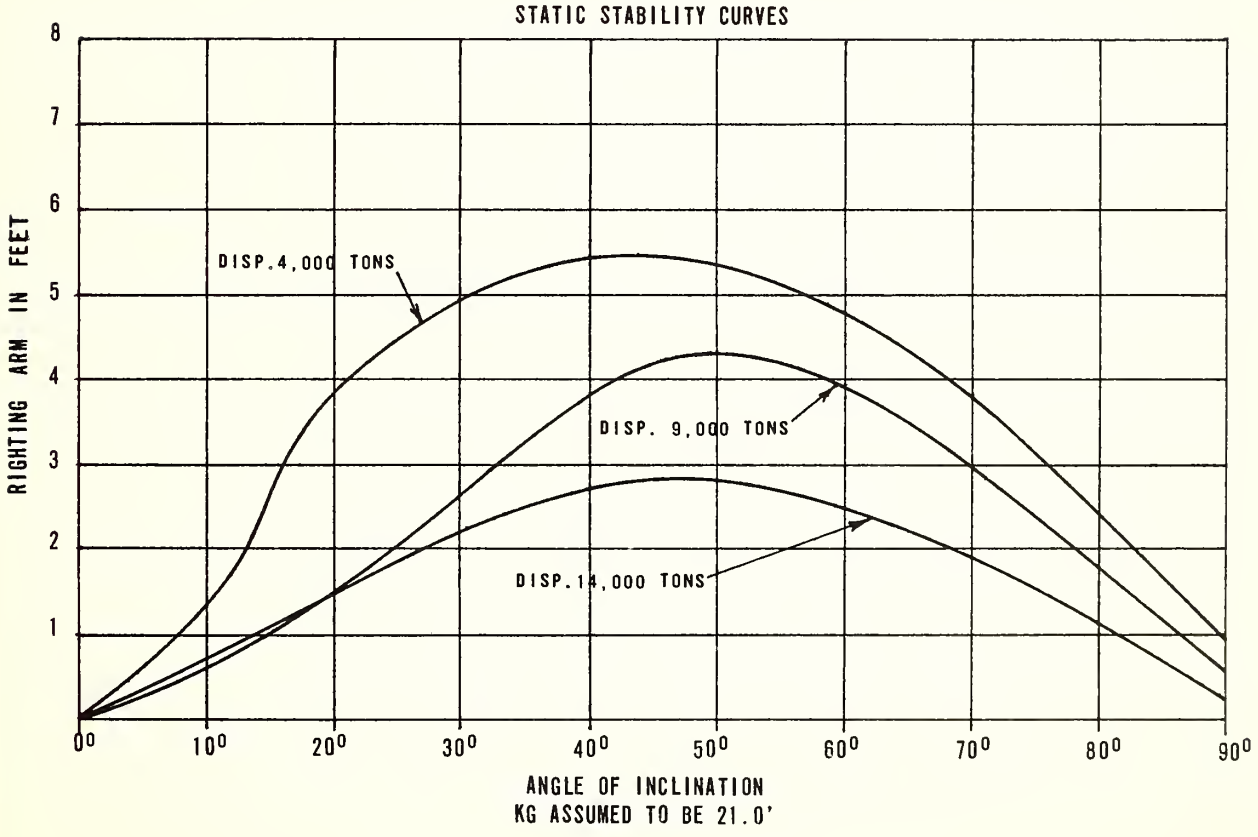

FIGURE 17

Correcting the Stability Curve–graphically

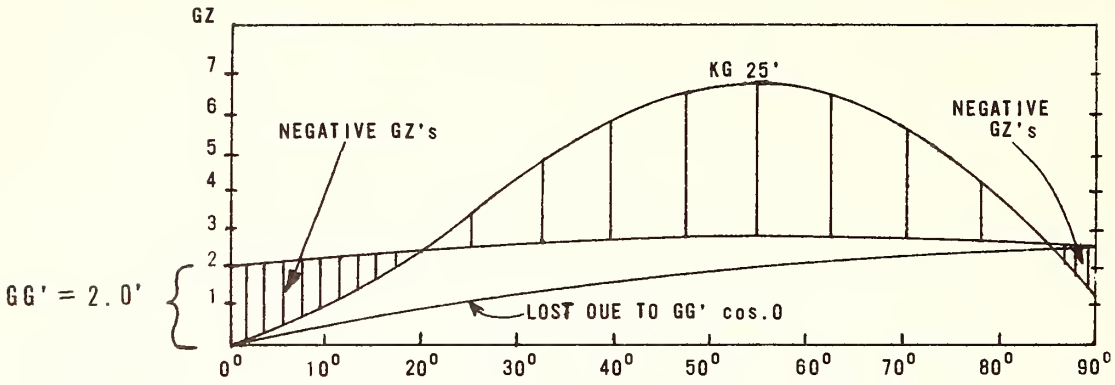

FIGURE 18

Righting Arms corrected for KG 2.5′ higher than assumed and located 2.0′ off C.L.

Note: new baseline is the cosine correction curve

Some data on Stability Curves

1. The angle at which maximum righting arm is developed is intimately associated with the angle at which the deck edge is immersed. For cargo vessels deck edge immersion can be considered for practical purposes as the end of the range of stability, since after that angle is reached the value of the righting arms decreases rapidly.

2. Increase of freeboard results in larger values of righting moment at all angles of inclination beyond the angle of deck edge immersion.

3. Tumble home results in a loss of GZ at all angles after immersion of the tumbled portion of the side.

4. As displacement increases, the righting arms on the curves show a gradually decreasing tendency.

5. Curves of statical stability should be studied carefully because they assume stability in still water and they ignore ship motions and wave action.

6. It should be remembered that these are curves of righting arms not righting moments.

7. A curve showing large values of righting arms at light displacement does not necessarily indicate more stability than a curve showing smaller arms at a larger displacement.

Questions: In Stability and Trim for the Ship's Officer by La Dage and Van Gemert consider these questions on page 88:–

1, 2, 3, 4, 8, 12, 13, 14, 15

Cross Curves of Stability

Cross Curves are used to find the value of righting arms just as Statical Stability Curves are used to find the same thing. In Cross Curves the angles of inclination are constant and the displacement changes. The Statical Stability Curves are the opposite of this. Both methods produce identical righting arms for the same displacement, inclination and KG. The curves are corrected in the same way. It might be noted that the cross curves and statical stability curves can be considered as forming a three-dimensional system and that the statical stability curves can be formed from the cross-curves. As might be expected the maximum righting arms occur at a value of 45°.

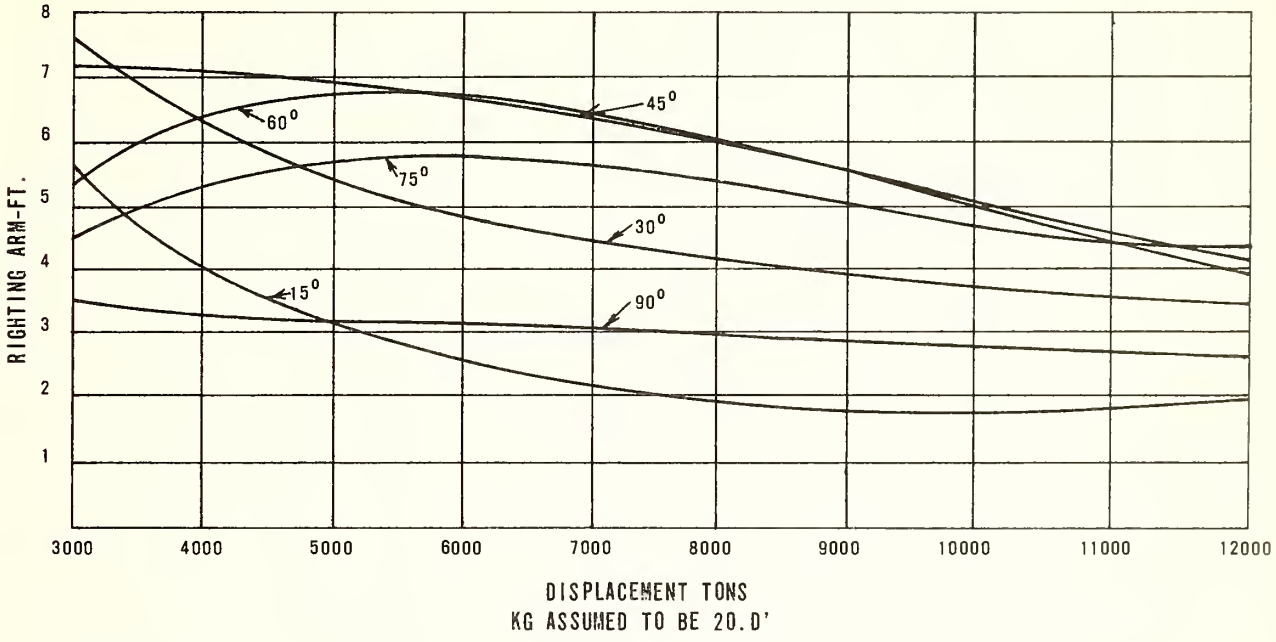

FIGURE 19

Questions: In Stability and Trim for the Ship's Officer by La Dage and Van Gemert consider these questions on pages 88 and 89:–

21, 22, 23, 27

Form Gain

There are several types of form gain but at the moment we will discuss the form gain that occurs when a ship rolls. When a ship rolls the water plane increases and up to a point approaching the deck edge the GZ increases.

In consequence of all this a righting moment GZ x displacement is set up.
If the ship has flare this righting moment may have a large increase.
If the ship has tumble home the form gain may be reduced and consequently the righting moment may be reduced.

Calculation of Moment to Heel 1°

Every deck officer should be able to calculate this. The formula is:–

$$\frac{\text{displ. x GMt}}{57.3} = \text{moment to heel } 1°$$

Why do we need this knowledge?

to correct heel on leaving port
to correct heel due to loss of deck load or shifting of cargo in the event of damage

List may be read from inclinometer.

Angle may be calculated by measuring deflection of a pendulum of known length from vertical.

Determination and correction of heel calculation

FIGURE 20

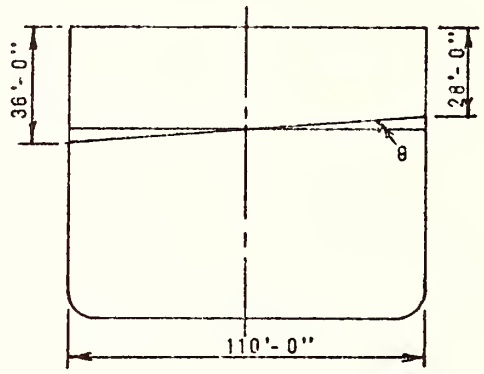

$$\tan\theta = \frac{8'}{110'} = 0.0727 = 4.2^\circ$$

If ship has GMt of 4.5′ and a displacement of 15,000 tons, mom. to heel 1° =

$$\frac{15{,}000 \text{ tons} \times 4.5'}{57.3} = \frac{67{,}500}{57.3} = 1{,}178 \text{ ft. tons}$$

to correct we need to generate a transverse moment of 1,178 ft. tons towards high side for 1° heel.

To correct a heel of 4.2° = 1,178 ft. tons x 4.2 = 4,948 ft. tons

Example:

1. A vessel leaving port has a 4° list to port. The displacement of vessel is 17,000 tons and GMt is 3.5′. How many tons of fuel oil must be pumped from port double bottom tank to stb'd double bottom tank? The transverse distance between the centers of gravity of these tanks is 50 feet.

$$W = \frac{GM \times \tan\theta \times \text{displ.}}{d}$$

$$W = \frac{3.5 \times .06993 \times 17{,}000}{50}$$

$$W = 83.2 \text{ tons}$$

Questions: Stability and Trim for the Ship's Officer by La Dage and Van Gemert.

Page 88 – Questions 5, 6, 7

A-4 FREE SURFACE

Explanation

Free Surface: Whenever the surface of a liquid within a vessel is free to move the condition known as free surface is present.

When a vessel rolls in a seaway and liquid in a tank in the vessel moves from side to side the center of gravity of the vessel is in effect no longer in its original position. The phenomonom is known as a virtual rise of the center of gravity.

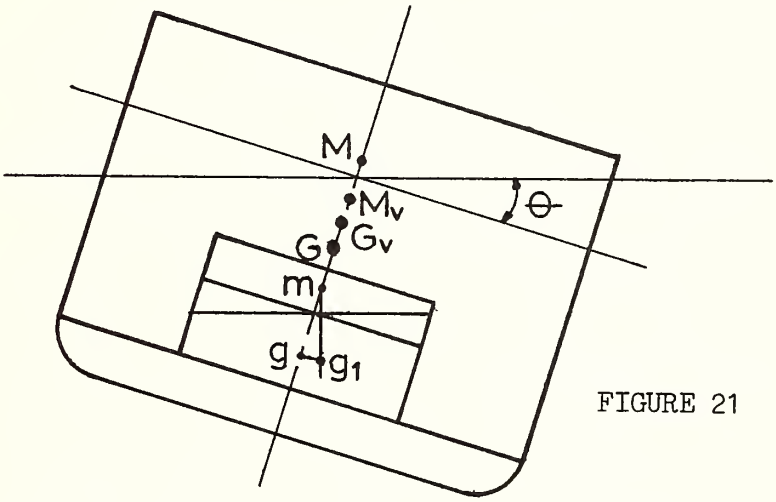

FIGURE 21

First Method

The vessel above has a deep tank that is partially filled with sea water. The center of gravity of the water in this tank at zero inclination is at g. At an inclination equal to θ the CG of this sea water is at g_1. Gravity as a force acts through g_1 when the ship has inclination θ. The force of gravity also acts through m the metacenter of the liquid in the tank.

m can be located by the relationship

$$\overline{gm} = \frac{i}{Vw}$$

i = moment of inertia of the surface of the liquid in tank
Vw = volume of liquid in tank

The effect of the free surface of the tank on the ship's metacentric height is the same as the effect of raising a weight equal to that of the water in tank through a vertical distance gm.

Second Method

The second method is to consider that the free surface causes a lowering of the ship's metacenter M to point Mv which we may call the virtual metacenter. By either method the ship's metacentric height is reduced by the amount i/V. V as the volume of displacement of entire ship.

Application

If one or several tanks have free surface their surface moments of inertia are calculated individually and added if more than one. Should a tank contain liquid which does not have the same specific gravity as the water in which the vessel is floating the moment of inertia of the free surface of the liquid in the tank is multiplied by the ratio of the specific gravity to that of the outside water.

The vertical movement of the center of gravity (KG) of a vessel can be found by the following formula:—

$$GG' = \frac{v/35 \times i/v}{V/35} = i/V$$

The effect of F/S on the center of gravity of a vessel therefore can be found by dividing its moment of inertia of the "free surface" by the displacement volume of the ship.

The following principles concerning "free surface" are pertinent:

1. The effect of free surface depends upon the dimensions of the surface of the liquid and the volume of displacement of the vessel.

2. The effect of free surface does not solely depend upon the amount of liquid in the tank.

3. The effects of "free surface" depend to a minor degree upon the relationship between the specific gravity of the liquid in the tank with the specific gravity of the liquid in which the vessel is floating.

4. When a vessel is in an upright position the breadth of free surface in any tank has one value; when the vessel starts to heel, the breadth of free surface starts to change. If the tank is nearly full or nearly empty, the breadth will decrease rapidly so that will make free surface effects become almost neglible.

Example: A vessel with a displacement of 15,000 tons has a rectangular tank that is 80′ long and 30′ wide and 6′ high. We shall calculate the free surface effect when ½ full by both methods.

$$\text{using F/S formula} = \frac{lb^3}{12V}$$

First method (rise in KG)

Capacity of tank 30 x 80 x 5 = 12,000 ft.^{3}
½ capacity ½ x 12,000 = 6,000 ft.^{3}
Weight of water $\frac{6,000}{35}$ = 171.4 tons

Virtual rise of g = $\frac{80 \times 30^3}{12 \times 6,000} = \frac{2,160,000}{72,000} = 30'$

$GG' = \frac{w \times d}{displ} = \frac{171.4 \times 30}{15,000} = \frac{5,140}{15,000} = .343$ ft. rise in KG

Second Method (reduction of M)

$GG = \frac{lb^3}{12 \times Vol.} = \frac{80 \times 30^3}{12 \times 15,000 \times 35} = \frac{2,160,000}{6,318,060} = .343$ ft. reduction in GMt

Cross Connections: Cross connections that run between wing tanks, deep tanks, and occasionally double bottom tanks are becoming increasingly common on today's ships. The purpose is to equalize heel in case of damage. Cross connections should be kept closed when tanks have liquid in them. If not additional free surface will result. As an example assume a 15,000 ton displ. ship with 2 wing tanks 60' long, 20' wide slack and connected by a cross connection (square in shape) 2' wide and extending 70' across the ship.

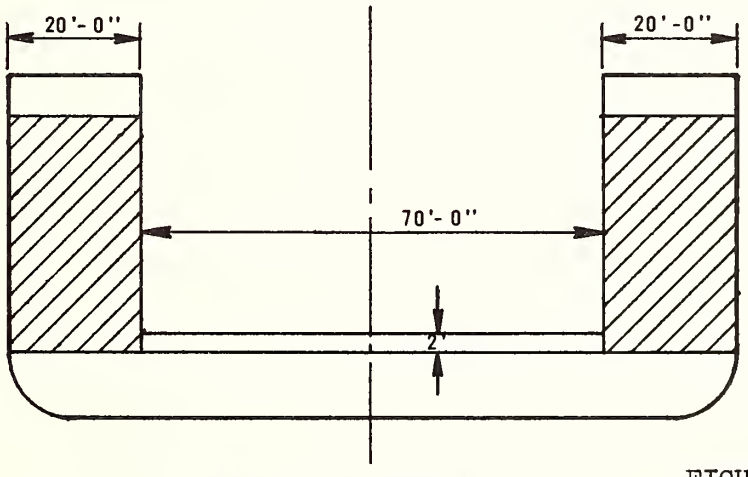

SECTION-CROSS CONNECTIONS CLOSED FIGURE 22

Calculation of F/S

$\frac{2(60 \times 20^3)}{12} = 80,000$ ft^4

$\frac{80,000 \text{ ft}^4}{15,000 \times 35} = 0.15'$ decrease in GMt

When the cross connections are open greater free surface will result as follows:

$$2\left[\frac{60 \times 20^3}{12} + (60 \times 20)\,45^2\right] = 4{,}940{,}000 \text{ ft.}^4$$

$$\frac{4{,}940{,}000}{15{,}000 \times 35} = 9.41' \text{ decrease in GM}$$

F/S correction by T&S book table

Another method and by far the most common is to use the T&S book table of tank data.

Tank Capacity and Free Surface Table is contained in all Trim and Stability Books.

Tanks are grouped as to liquids that will be carried.

All free surface corrections are for slack tanks and for 98% – 5° heel conditions for fuel oil, diesel oil, and cargo oil tanks. Flume tanks free surface corrections are for operating conditions.

The free surface correction is listed in the form of I/density of liquid. This correction can be listed in the free surface column of trim sheet. These I/density of liquid corrections are totaled and divided by displacement volume to obtain correction to apply directly to GMt.

Questions: La Dage and Van Gemert–"Stability and Trim for the Ship's Officer" page 103. Questions 1, 4, 5, 6, 7, 8, 10

Problems: "La Dage and Van Gemert–"Stability and Trim for the Ship's Officer" page 103-104. Problems 1, 2, 4

68d Trim and Stability Book
Selected problems–

1. Why aren't any free surface corrections listed for ballast tanks?

2. Are the free surface corrections listed for tanks, MA, MB, MC & in all loading conditions for 98% – 5° heel or slack?

3. In the Arrival–No Cargo–10% Fuel Oil and Stores condition what type of free surface values are shown?

A-5 ROLLING PERIOD

Explanation: The rolling period of a ship among waves is from the upright to one side to the other side and upright again. The natural rolling period of average cargo ships run from 14-18 seconds. As ships change dimensionally, in shape and in form the wave period varies.

The rolling period is of much concern to deck officers on barge and container carrying ships. Because of a large margin of GMt it is possible to have fast rolls and high resultant forces. In consequence of these forces generated by fast rolls the securing of cargo containers on deck is of extreme importance.

Effect of stability on control of rolling,

$T = \frac{.44B}{GMt}$ This formula is a rough approximation and is developed from $T = \frac{1.108\ k}{GM}$ where k is the radius of gyration of the ship.

T = period of complete roll from one side to the other and back in seconds

B = beam

This formula is based on the natural period of the vessel for the GMt of the vessel at the time of the roll. A vessel is sometimes forced out of her natural period of roll by wind and waves. These waves have a period continually different than the vessel's natural period. This is called forced rolling which does not generally continue for long periods of time.

Synchronous rolling occurs when the wave period and the rolling period are the same. This results in heavy rolling. If it continues for several cycles it may endanger the ship and her cargo.

The period of the wave is calculated as follows:

$T = 0.442\sqrt{L}$ where T = period in seconds and L = length of wave in feet.

Example: A ship has a rolling period in beam seas of 14 seconds. What length of wave will produce synchronous rolling?

$T = 0.442\ L$

$\left(\frac{14}{.442}\right)^2 = L = 998.56'$ length of wave

The rolling period formula may be used by the watch officer as a means of continually checking the GMt as follows:

$$GMt = \frac{(.44B)^2}{T}$$

Example: If a container ship in the 100% consumable 10% cargo condition has a GMt of 10.0′ and the beam is 100′. What is the rolling period?

$$T = \frac{.44\ B}{\sqrt{GMt}} = \frac{.44 \times 100}{\sqrt{10.0}} = \frac{44}{3.16} = 13.9 \text{ seconds}$$

If the same ship in the 100% consumables no cargo condition had a GMt of 15.0′ what would the rolling period be.

$$T = \frac{.44 \times B}{\sqrt{GMt}} = \frac{44.0}{\sqrt{15.0}} = 11.3 \text{ seconds}$$

It can be seen that a change in GMt of 5.0′ or an increase of 50% resulted in a decrease of rolling period of 2.6 seconds or 18%.

Forces generated by rolling: At the end of a roll when the ship is starting to return to the upright, there is an acceleration of every weight in the ship acting at right angles to a line from the weight to the axis of rolling.

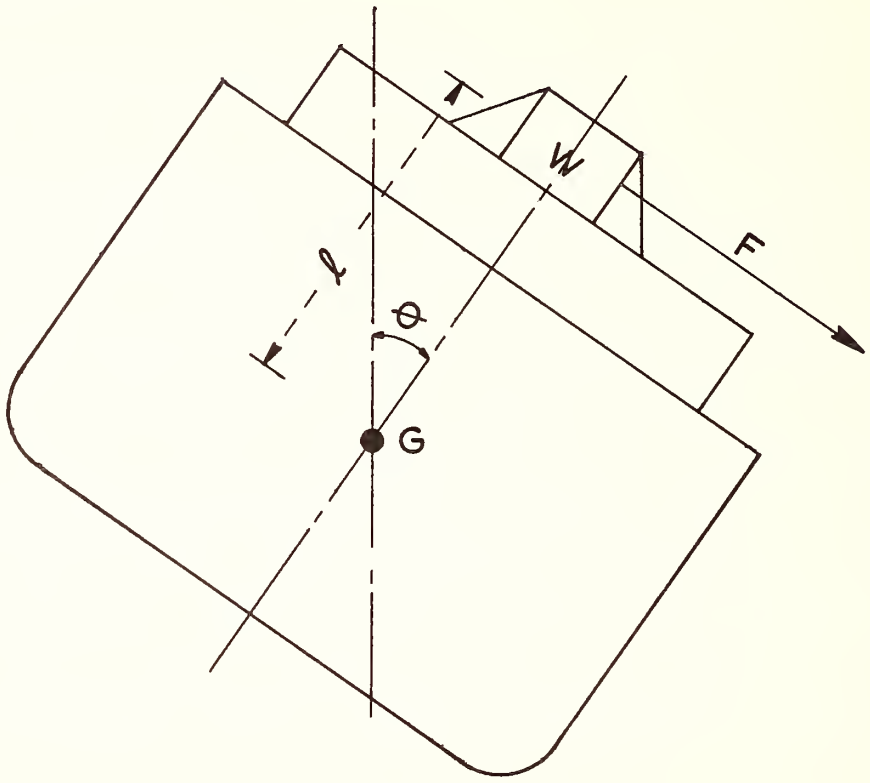

FIGURE 23

This force "F" can be shown to be:

$$F = \frac{W}{g} \times \frac{4\pi^2 \theta\ l}{T^2} \times \frac{\pi}{180}$$

$$\text{or } F = \frac{0.0214\ W\ \theta\ l}{T^2}$$

Where F = tangential force in pounds
W = weight in pounds
θ = maximum angle of roll in degrees
l = distance from axis of rolling in feet
T = period of complete double roll in seconds
g = acceleration due to gravity in ft. per sec.^{2} (32.16 per sec.^{2})

Example: If a 40′ container weighing 20 tons is located on top of a hatch cover 45′ above axis of rolling and ship has a period of roll of 30° in 15 seconds. What is the tangential force that the lashings will have to resist?

$$F = \frac{0.0214 \times 20 \text{ tons} \times 30^\circ \times 45'}{15^2} = 2.5 \text{ tons}$$

There is also another force that the lashings will have to withstand and that is the transverse component of weight. This is calculated as follows:

Trans. comp. = W x sin θ
= 20 tons x .5 = 10.0

Therefore the total load that the lashings will have to resist is as follows:

total force = tangential force + trans. comp. of W
= 2.5 tons + 10.0 tons = 12.5 tons

It should be noted that the transverse component is four times as large as the dynamic tangential force calculated on page 28. In other words, to keep the transverse component of force as small as possible, the roll angle should be kept to a minimum.

Questions: La Dage and Van Gemert's–Stability and Trim for the Ship's Officer page 29 questions 6, 7, 8

Problems: Same text as above page 30 problems 5, 6

A-6 PITCHING

Explanation

Pitching is the vertical movement of the bow and stern (alternately) among waves. Because of the magnitude of the longitudinal mass moment of inertia pitching in still water is a practical impossibility.

When the ship is lying in the most favorable aspect for pitching its longitudinal centerline plane is perpendicular to the wave crests and hollows. The waterline is no longer a plane; and in the case of ships as long or longer than the wave the center wave profile is projected on the ship's side. The true location of the center of buoyancy when the ship is pitching among waves cannot be determined, therefore, from its location in still water, but must be computed with the wave profile along the ship's side as the waterline.

Suffice to say that the pitching period is usually about 1/2 to 1/3 the rolling period.

Forces

In the case of a vessel that is pitching, the tangential force acting upon any part is $(w/g)r_1 (4\pi^2/Tp^2) \theta$.

where: r_1 is the radial distance to the axis of pitch
Tp is the period of pitch
θ is the maximum angle of pitch in radians

The total vertical force is then the sum of the tangential force and W cos θ. For the purpose of this chapter it may be assumed that the axis of pitch is located longitudinally at the center of Flotation and vertically at the height of the center of gravity.

Example:

Calculate the total virtual weight of a 48 ton case of machinery located on #1 hatch 350′ from the axis of pitch. The vessel is pitching 6° in 15 seconds?

$$\text{tangential force} = \frac{W}{32.2} \times 350' \times \frac{4\pi^2}{225} \times \frac{\pi}{30}$$

$$= \frac{48}{32.2} \times 350 \times \frac{39.44}{225} \times \frac{3.14}{30}$$

$$= 1.49 \times 350 \times 0.175 \times 0.105$$

$$= 522 \times 0.175 \times 0.105 = 9.59 \text{ tons}$$

W cos θ = 48 x .995 = 47.76 tons
total weight = 9.59 + 47.76 = 57.35 tons

A-7 TRIM

Explanation:

Trim is the difference in the drafts forward and aft. The problems for the ship's officer involving trim are these:

1. What trim do we want for maximum performance of the ship?

2. What trim is necessary entering port, leaving port, in port, and at sea?

Some definitions are in order as follows:

Change of trim: Algebraic difference between trims before and after any given operation.

Trimming axis: Longitudinal Center of Flotation or Center of Gravity of waterplane at which the ship is floating.

Trimming moment: The moment created by shifting a weight longitudinally or loading or discharging a weight. The lever is the distance fwd. or aft of trimming axis.

Tons per inch immersion: For any waterplane, the weight in tons of sea water displaced by the ship in sinking a distance of one inch from that waterline without change in transverse or longitudinal inclinations.

Moment to change trim one inch: A measure in foot tons for a specific draft, to be divided in to trimming moment to determine trim in inches. The formula for the calculation of MT1″ is as follows:

$$MT1'' = \frac{GM1 \times Displ.}{12\ L}$$

where GM1 = longitudinal metacentric height in feet.
L = length of ship

Another formula for MT1″ which can be used more practically is the following:

$$MT1'' = \frac{k \times (TPI)^2}{B}$$

where B = breadth

k is a constant depending on block coefficient as follows:

b	k
.65	28
.70	29
.75	30
.80	31

Example:

A container ship with a TP1 of 95 tons and a block coefficient of .80 loads 500 tons 40′ aft of LCF. at an even keel draft of 27′. What are the new drafts at the perpendiculars when L.B.P. is 670.0′, LCF is 350′ aft of F.P., Breadth is 85.0′.

$$MT1'' = \frac{k \times (TPI)^2}{B} = \frac{31 \times (95)^2}{85} = 3{,}291 \text{ ft. tons}$$

$$\text{trim} = \frac{500 \times 40}{3291} = 6.08''$$

$$\text{sinkage} = \frac{500}{95} = 5.26''$$

Draft	A 27′0″	F 27′0″
sinkage	+ 0′5¼″	+ 0′5¼″
Draft + sinkage	27′5¼″	27′5¼″

trim fwd $6.08'' \times \frac{350}{670} = -3.16'' = -\ 3\ 1/8$

trim aft $6.08'' \times \frac{320}{670} = +2.92'' = +\ 2\ 7/8$

drafts corrected for sinkage	F 27'5 1/4"	A 27'5 1/4"
	- 3 1/8"	+ 2 7/8"
	F 27'2 1/8"	A 27'8 1/8"

One of the trim problems that frequently occurs is where should cargo be loaded to change draft at one end only. The formula for this is:

$$\text{distance from LCF} = \frac{2(MT1'')}{TP1''}$$

Change in displacement for trim: Many ships now have curves on their hydrostatics for "change in displacement due to trim aft" and "change in displacement for trim fwd." This will prevent the possibility of error due to reading of displacement curve or hydrostatics table for assumed even keel draft. This error is due to the difference in the form of the vessel forward and aft. If the Center of Flotation is aft of midship, the change of displacement with trim curve will show an addition to displacement with trim by the stern. When the Center of Flotation coincides with amidships there is no correction.

Change of GMt due to trim: Most merchant ships are of such a form that the waterplane aft rapidly broadens as trim aft increases hence I of the waterplane becomes larger as the waterplane rapidly increases.

Inertia decreases when trimming by the head because there is a small increase of waterplane forward and large decrease of waterplane aft.

To sum it up BM consequently will increase with trim by the stern and decrease with trim by the head.

Questions: Stability and Trim for the Ship's Officer by La Dage and Van Gemert

Questions page 142 2, 4, 6, 8, 12, 13, 17, 18, 19
Problems page 142-143, 1, 2, 9

Attwood & Pengelly Theoretical Naval Architecture page 147
Problems 1, 5, 6, 8

A-8 BALLASTING

Ballasting is the operation of loading liquids or solids to change the condition of a ship i.e. draft, trim, or stability.

De Ballasting is the operation of discharging liquids or solids and it also is performed to change the condition of a ship i.e. draft, trim, or stability.

Ballast can be in the following forms:

Liquid
Solid

Liquid ballast may be:

Salt Water
Fresh Water
Fuel Oil
Cargo Oil
Mud

Solid ballast may be:

Sand
Slag
Concrete
Pig Iron
Ore
or other solid material

Let us examine some of the characteristics of ballast.

Solid Ballast:

Requires time and people to load, discharge, and secure in place. It can be secured so that likelihood of shifting is very dim. It can be covered or pressed so that no F/S will exist. If it should get loose it is a severe hazard to the ship. Flexibility of ship is reduced. It is generally more dense and takes up less space to stow.

Liquid Ballast:

Minimum of shipboard personnel can load discharge or shift liquid ballast in tanks, quickly. Free surface of tank at time of loading or discharge is a problem. Clean ballast is Salt Water or Fresh Water loaded in clean tanks. Dirty ballast is Salt Water or Fresh Water loaded in empty Fuel Oil or Cargo Oil tanks.

Dirty Ballast:

Advantages easy to load.

Disadvantages:

Strong possibility that S.W. will be in F.O. next trip. Chief Engineers generally very unhappy about this form of ballasting. Discharge problem—not within 100 miles of coast. Barge discharge if carried into port expensive, time consuming. Ship very likely to have marginal stability for last 100 miles of trip if discharged at sea. What has been done about the problems created by Oily Ballast?

Development of separators
Installation of clean Ballast systems
Port facilities for discharge of Oily ballast

Ballasting is an extremely important operation for Barge & Container carrying ships because of the following:

Broad range of stability
Fast rolling periods in light condition
Longitudinal strength problems

Several years ago when ore ships were being converted into container ships the wing tanks were removed. In the beginning of operations the ships were not always loaded full and down and as a result exceptionally fast rolls developed. In consequence of this structure was damaged, wire lashings were parted, and also containers were lost over the side.

Ships are also ballasted because of the following:

To reduce wind heel area
To get wheel in water
To change trim
To increase or decrease stability
To ride out a storm

Precautions when Ballasting:

1. Tanks required to be ballasted with salt water shall be immediately filled and carried pressed up at all times while such ballast is necessary. When not ballasted such tanks shall be kept pumped to minimum content at all times.

2. During the ballasting, a reduction in the vessels GMt due to slack free surface will occur until the tank is pressed up. This temporary loss in GM (in feet) is equal to the salt water free surface of the tank divided by the vessel's displacement (in long tons) at the moment.

3. Cross connections between all port & starboard double bottom and deep tank pairs shall be kept closed when carrying liquids, and open when empty.

4. Fixed ballast is assumed as part of the light ship condition.

Problems: If a container ship is loaded as follows:

Item	Weight	V.C.G.	Free Surface
Light Ship	12,036	26.39	
Stores	25	40.00	
Containers in hold	7,896	31.30	
Containers on deck	5,134	67.50	
Fuel Oil	340	8.70	4,319
Fresh Water	123	16.90	1,591
Roll Tanks	398	21.50	9,360
Lube Oil	10	10.00	64
	25,962	35.67	15,334

Draft	Displacement	GMt required	KMt
26.0′	25,500	1.46′	33.8′
26.5	26,000	1.42′	33.75′
27.0	26,600	1.38′	33.69′
27.5	27,200	1.35′	33.68′
28.0	27,750	1.33′	33.66′
28.5	28,300	1.30′	33.66′
29.0	28,900	1.29′	33.68′
29.5	29,450	1.26′	33.70′
30.0	30,000	1.26′	33.75′
30.5	30,650	1.25′	33.80′
31.0	31,250	1.23′	33.85′
31.5	31,800	1.22′	33.92′
32.0	32,450	1.21′	33.99′

a. How much salt water ballast is required at an average V.C.G. of 2.6′ to meet GMt required?

b. If roll tanks are dumped how much ballast will be required?

c. If containers on deck were removed how much if any ballast could be necessary to meet GMt required?

d. What will the rolling period of the above vessel (with a Beam of 85′) be for condition as shown?

e. What will the rolling period be after ballast is loaded as per question (a)?

SUBDIVISION

PART I – B-9 FLOODABLE LENGTH

Explanation–Floodable length is the maximum length of a compartment that can be flooded without causing the ship to sink and whose compartment midlength is at the point in question.

If transverse watertight bulkheads were not placed a distance away from the point equal to no more than ½ the floodable length, then the flooding would continue beyond the floodable length and the vessel would sink. Location of transverse watertight bulkheads (subdivision) is a function of floodable length. The location of the bulkheads is influenced by the floodable length curve but the reverse is not true.

Standard of Subdivision–Regulations of the International Conference for Safety of Life at Sea set up certain standards of subdivision. These standards and the application of them are as follows:

Criterion of Service Numeral is based on the relative volume of passenger space below the margin line, the number of passengers and the relative volume of machinery space below the margin line. An increase in any of these factors tends to increase the criterion numeral, and to decrease the factor of subdivision numeral. The numbers usually run between 23 and 123. A large passenger ship would have a number near 123, while a small cargo ship would be assigned a number near 23.

Factor of Subdivision is selected from curves furnished by the convention for this purpose. The intersection of the Criterion of Service curve and the **Subdivision Length** ordinate determines the Factor of Subdivision.

Compartment Standard is determined by the Factor of Subdivision. The compartment standard is the reciprocal of the factor of subdivision. If the compartment standard was 1, it would mean that any one compartment could be flooded, and if the space within the compartment did not exceed accepted permeabilities, the vessel would remain afloat.

A compartment standard of 0.5 means that the ship is a 2 compartment vessel. If the factor of subdivision were .3 then the compartment standard would be 10/3=31/3 or 3 compartments. Because this standard exceeds 3 this would be called a good degree of subdivision. Permissable length can be found by multiplying the factor of subdivision by the floodable length. Before going into floodable length a few terms must be explained:

Margin Line is an imaginary line drawn 3″ below the line of the top of the bulkhead deck. This three inches provides a margin of safety to the designers calculations.

Permeability is the percentage of the volume of the compartment which can be occupied by water if flooded. The permeabilities generally used are these:

Cargo	.60
Machinery Space	.85
Crew or Pass Space	0 or .95
Tanks	.95

Floodable Length—Up to this point we have not discussed the effect on transverse stability of flooding after damage; thus a vessel with insufficient stability, as indicated by its GM, is in danger of capsizing and sinking. A ship can also sink due to excessive trim or loss of buoyancy. The ability to survive flooding in this situation is determined by the "Floodable Length Curve".

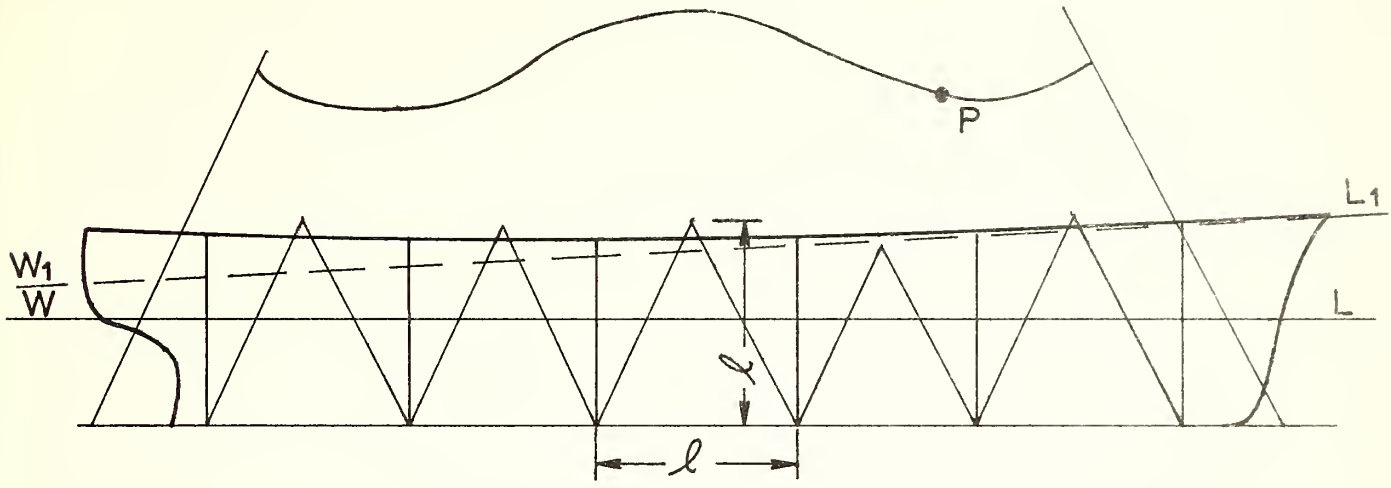

FIGURE 24

The above figure represents a typical Floodable Length Curve. To illustrate how this curve is developed we can discuss the determination of a single point represented by "P" as follows:

In this case WL is the full load draft of the vessel which is normally an even keel condition but could include trim if the vessel were so designed. A margin line is drawn 3" below the top of the vessel's watertight bulkheads, which in a cargo ship usually is also just 3" below the weather deck.

This line represents the deepest submersion possible without sinking the ship by flooding over the deck and into all of the holds.

$W_1 L_1$ is an assumed trimmed waterline tangent to the margin line which as we mentioned represents the upper limits of this vessel's watertight bulkheads. The ship could float at waterline $W_1 L_1$ without sinking but could not survive a deeper draft.

With these 2 waterlines defined, it is a simple matter to calculate the buoyancy up to each one and the longitudinal center of each volume. Since $W_1 L_1$ represents the maximum buoyancy of the ship and WL is the designed buoyancy, the difference between $W_1 L_1$ and WL is the reserve available to withstand flooding.

We therefore can subtract these two values, find the reserve buoyancy and the location within the ship that would result in $W_1 L_1$ after flooding. With this information we can calculate the length of ship to hold this volume of flooding water. The length is then plotted normal to the base line, at its center as calculated above. This is shown by Point "P" in the sketch.

By assuming several trim lines tangent to the margin line at different trims we can determine other points on the curve and draw the Floodable Length Curve as shown.

Where the spacing of bulkheads is less then the floodable length measured at the center of the compartment, the ship is considered to be able to survive flooding, assuming of course, that there is enough transverse stability to prevent capsizing.

In the sketch, the triangle indicated in each compartment is just a convenient way of showing the relation between floodable length and length of compartment and in each case the height of the triangle is equal to the length of the compartment.

Use of the Floodable Length Curves

In order to use these curves the deck officer should be aware of the following:

1. Isosceles triangles are constructed from the base of each watertight compartment.

2. The curves are based on assumed permeabilities. If the estimate permeability is greater or lesser than that shown the curve can be corrected by drawing another curve parallel to the original curve. The heights of the new curve can be found to a close approximation as follows:

> the height of original curve above B.L. is to estimated permeability as height of estimated permeability curve is to original permeability.

3. It will be noticed that the effects of flooding a compartment are worse at the ends of the ship. Also flooding of these compartments could lead to an out of trim condition and flooding over the margin line if the length of these compartments were not reduced.

4. To check if the ship will founder do the following:

> Check to see if the intersection of the sides of the triangle (constructed in the compartment) is above the appropriate permeability curve. If this is so the vessel will sink, provided initial draft before flooding is deep enough.

5. Floodable length curves will not generally be found in the T&S book for the ship.

Questions:
La Dage and Van Gemerts–Stability and Trim for the Ships Officer Page 121
Questions 1, 12, 13, 14, 15, 16, 17, 18, 19

SHIP OPERATION

PART I – C-10 ANTI ROLL TANKS

The reduction of rolling is a problem that has been under investigation for nearly a hundred years. On cargo ships heavy rolling may cause shifting of cargo, structural damage, loss of deck cargo, and damage to gear. In general excessive heavy rolling will decrease the ship's speed, may result in list due to shifting of cargo and can cause injury to personnel. The schemes and installations which have been tried are:

1. Fitting of bilge keels
2. Movement of solid weights
3. Movement of water
4. Gyroscopes
5. External fin movements

These 5 systems can further be divided into 2 groups i.e. active and passive systems. The active systems require power to produce and activate the anti roll medium. The passive systems depend upon the rolling motion of the ship to produce anti-rolling moments.

Bilge Keels

The use of bilge keels was the earliest method tried. They are in the passive group. Their effectiveness at damping roll is greater as rolling increases.

Solid Weights

These systems are in the passive groups and consist of a heavy weight moving across the deck.

Gyroscopes

This system uses large and high speed gyroscopes to provide a resistance couple to the rolling motion of the vessel. This is a passive stabilizer in that it only requires power to keep the gyro spinning. Sperry devised an active gyro stabilizer. Motors were used to forcibly precess the gyro in such a direction so as to create a stabilizing couple opposing the external rolling couple. The roll reducing action of the gyro stabilizer does not depend upon the speed of the ship.

External Fins

The fins extend outward from the hull. The forward motion of the ship produces a lift in one direction and a lift on the other fin in the opposite direction. This couple opposes the rolling couple of the vessel. This system is not very effective at low speeds. The fins can be either retractable or

non-retractable. In the present stage of development sensing elements detect roll, roll velocity, and roll acceleration.

Anti Roll Tanks

The early systems consisted of slosh tanks installed in the upper part of a ship. The movement of the water always lags behind the roll of the ship and is always "down hill". This movement deducts potential energy from the ship. The rolling period is lengthened by reason of the free surface effect reducing the GMt. These tanks have been of both "passive" and "active" types. In one case of an active tank an air compressor supplied air above atmospheric pressure to the upper part of the tank. By varying the amounts of water in the tanks on the port and starboard sides of the ship, stabilization was achieved.

Passive tanks are the most common system in use at this time. One installation uses two tanks each side with cross over ducts containing butterfly valves.

Another type uses a three tank system consisting of two side tanks and a center buffer tank. This is known as the flume tank system.

Vertical stanchions act as constrictions and control the flow of liquid. These flume nozzles (stanchions) also prevent the movements of the liquid and the vessel from synchronizing. The only way of changing the characteristics of these flume tanks at this time is by changing the liquid level in the tanks. These changes would be made to compensate for various cargo loadings and stability conditions.

Designers and Seafarers contacted claim that on the average at synchronism roll reduction of 40-50% is possible but for condition outside synchronism rolling will be slightly worse.

Operation of Flume Stabilization

In many cases a dump tank is provided under the flume tank. The purpose is to be able to dump the liquid into a tank with different dimensions quickly. The idea being that the dump tank will be able to hold the liquid contained in the flume tank but the free surface generated will be much less. In the event of damage to the ship this is one of the first acts to perform as it will result in lowering the KG and substantially reducing the free surface effect.

Some items to consider in using flume tanks

1. Prior to departure determine tanks to use

2. Estimate rolling period and liquid levels

3. Check free surface correction and effect on stability

4. To determine the above factors read operating instructions of manufacturer. Work up data from tables contained in instructions.

5. Preliminary liquid levels are to be determined from roll periods based on GMt available. These preliminary liquid levels therefore will be only approximations and are to be corrected according to roll period after leaving port.

6. Liquid levels should be kept constant during voyage except for large change in roll period ± 2 seconds due to consumption of consumables.

7. If liquid levels are changed in the flume tank check the free surface.

8. Liquid levels in flume tanks should be changed by reason of rolling periods, not height of waves.

Reference: Operating Instructions for the Flume Stabilization System as installed in the "Lash" Vessels (C8-S-8lb) prepared by John J. McMullen Associates, Inc.

Questions: 1. How is liquid level of flume tank determined before departure?

2. In case of damage to vessel and flume tank is operating what do you do?

   what effect does this have on KG?
   what effect does this have on free surface?

3. To what extent will a flume tank operating correctly reduce roll?

Problem #1 On the C8-S-8lb in the 0% cargo 100% consumables condition the ship has the following characteristics:

displ.	= 23,491
draft	= 21.85′
GMt	= 13.79′
beam	= 100.0′

Determine: tank arrangement (that is, whether to use one tank or both tanks)

roll period
tank liquid level
free surface correction (flume tank)
what length of wave will produce synchronous rolling

Problem #2 On the C8-S-8lb in the 50% cargo 100% consumables condition the ship has the following characteristics:

displ.	= 31,889
draft	= 27.45′
GMt	= 11.04′
beam	= 100.0′

Determine: roll period
tank arrangement
tank liquid level
free surface correction (flume tank)

Problem #3 On the C8-S-8lb in the 100% cargo 10% consumables arrival condition the ship has the following characteristics

displ.	40,500
draft	32.65'
GMt	3.53′ (uncorrect for F/S)
beam	100′
free surface (excluding flume tank)	3,392
GMt required	2.50′

Determine if use of Anti Roll tanks are feasible and if so calculate

roll period
tank arrangement
tank liquid level
free surface correction (flume tank)

Note: To solve these problems use the Operating Instruction Manual for the Flume Stabilization System designed by John J. McMullen Associates, Inc.

C-11 CONTAINER SHIP OPERATION

Container Ship Operation is one of the newest and most efficient types of marine transportation. To the deck officer it presents new problems however. Some of these problems are the following:

quick turn around
broad stability range
quick and accurate stability calculations are required
it is difficult to load by eyeball
high deck load–(large sail area).

Quick turn around–This involves many operations going on at the same time such as storing, bunkering, taking water and loading and discharging cargo simultaneously. All of these operations will have an effect on the stability, heel and trim of the ship.

Broad Stability Range–The stability range is so broad (0.2′ - 13.0′ excess of GMt available over required–in some cases) throughout the envelope of operating conditions.

Accurate Stability Calculations–Because of the broad range of stability available, an accurate check of GMt available must be kept at all times. It is important to know the excess of GMt available over GMt required continually. It is important to do this for the following reasons:

stable ship (stability not marginal)
ship must not be excessively stiff
efficient operation of flume tanks (for ships so fitted)

Loading Estimation–One container looks like another. A slip of paper indicating the weight, attached to the box, makes for the difference. In the old break bulk loading operation the rule of thumb was 2/3 in the lower hold and 1/3 in the tween decks. The deck officer could eyeball this loading with good results. The loading operation at the home port was spread over several days.

Now a container ship is loaded in a matter of one day or less and it is generally impossible to load safely by inspection. The point is that an accurate check of the loading operation must be kept.

Deck Load—Containers are frequently carried 2, 3, and 4 tiers high on deck and this results in the following:

reduction in GMt available because of rise in KG
extremely large sail area

Operation

It is the practice in most container ship operations that the calculation of weight, VCG, LCG, and possibly TCG of containers will be calculated ashore and data given to ship before sailing. Trim and Stability Books will have blank forms showing VCG, LCG, and TCG for each container space. The shore personnel will fill in mimeographed copies of this form and come up with a final result that will be delivered to the ship.

Preparation for Loading

It is important that the ship furnish the loading personnel—estimated data regarding tankage, stores, drafts, KG, GMt available, ballast. It is also important that data regarding stores and consumables to be loaded be furnished to loading personnel. It is common practice that many ships fill in a long form stability sheet with the following data:

Light Ship (operational)	Weight	VCG	LCG	F/S
Fuel Oil	"	"	"	"
Ballast Liquid	"	"	"	"
Fresh Water	"	"	"	"
Sub Total	"	"	"	"

The operational light ship will consist of stores, crew and effects, and lube oil. This form is continually updated and finally cargo, VCG and LCG (as provided by shore personnel) is added to sub total.

Ch. Mates' Note Book—The chief mates' note book is of tremendous value when it comes to estimating the quantity of cargo that will be loaded for a particular voyage. With the aid of the note book a judicious estimate may be made of the quantity and location of cargo to be loaded. With this in mind liquids may be shifted before arrival at dock so as to be ready for loading.

Recap of Stability and Weights and Moments—In a particular trade, loading seems to follow a pattern in regard to the season of the year. With this in mind a shipmaster we know has designed a form that has a recap of stability, weights, moments, trim and drafts. Figures 26-29

Curve of Maximum Allowable Heeling Moment

Another ingenious device is a curve of allowable vertical moments vs displacement. If you know your sub total displacement and vertical moments you can confer with the loading personnel and limit the vertical moments of the cargo to be loaded. This is accomplished by adding cargo to sub total tonnage and arriving at a total displacement. The equivalent vertical moment is read from curve. When the sub total vertical moment is subtracted from this total, the result is the maximum allowable vertical moment for this quantity of cargo. (Figure 25)

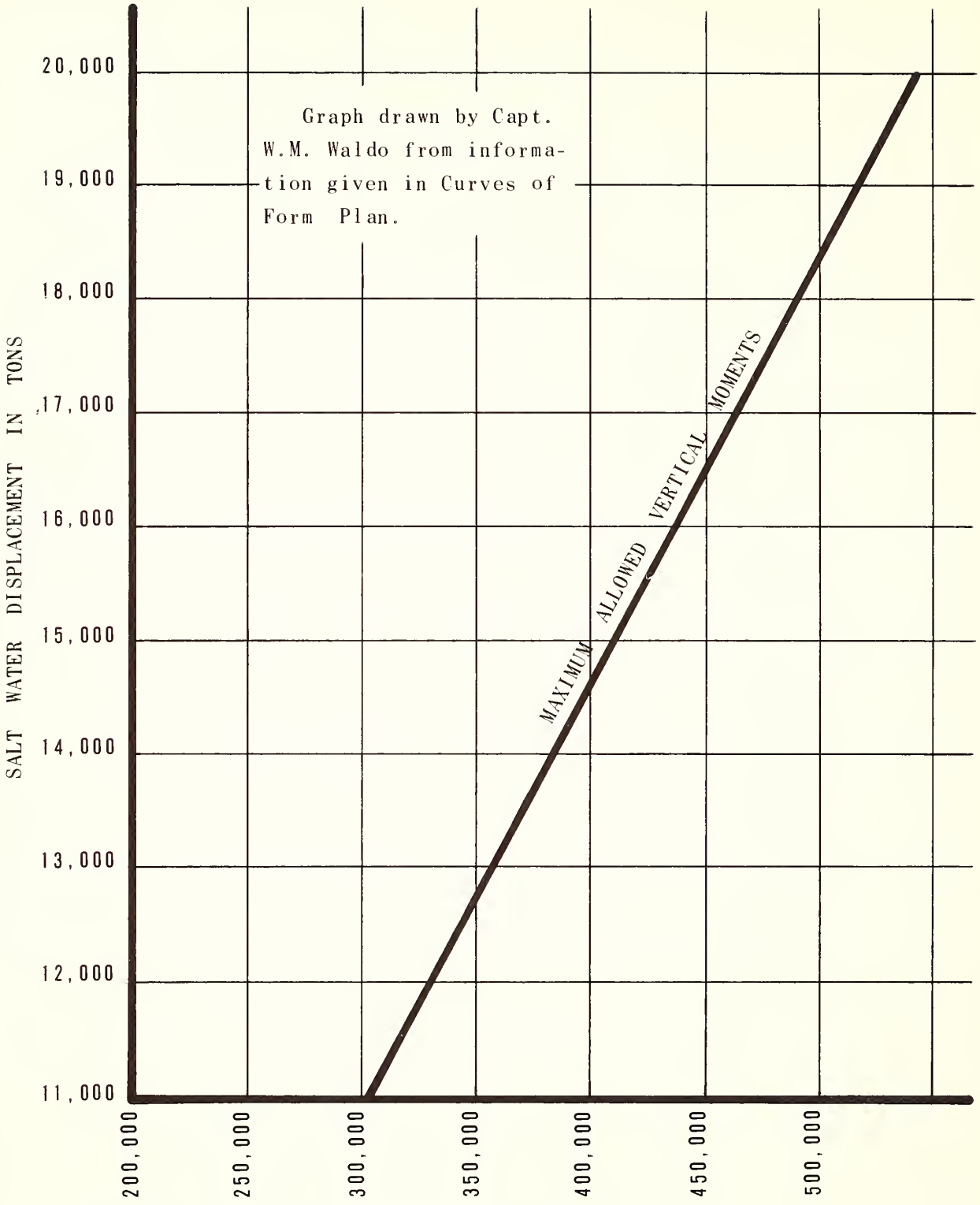
Graph drawn by Capt. W.M. Waldo from information given in Curves of Form Plan.
MAXIMUM ALLOWED VERTICAL MOMENTS
SALT WATER DISPLACEMENT IN TONS
20,000
19,000
18,000
17,000
16,000
15,000
14,000
13,000
12,000
11,000
200,000
250,000
300,000
350,000
400,000
450,000
500,000
VERTICAL MOMENTS

FIGURE 25

Form Prepared By: CAPT. WAYNE M. WALDO

RECAP OF CARGO LOADINGS

VOY.#	LT. SHIP TONS	FUEL TONS	S.W./BAL TONS	F. W. TONS	CARGO TONS	DISPL. TONS TOTAL

FIGURE 26

FROM THE PORT OF TO THE PORT OF

VERT. MOM. SHIP	VERT. MOM. CARGO	VERT. MOM. TOTAL	LONG MOM. SHIP	F/A	LONG MOM. CARGO	F/A	LONG MOM. TOTAL	F/A

FIGURE 27

Form Prepared By: CAPT. WAYNE M. WALDO

RECAP OF CARGO LOADINGS

COMPUTED									
VOY #	K-M ft.	K-G ft.	G-M ft.	F.S. ft.	G-M cor'd	ROLL sec's	S.W. DRAFT ft. in.	TRIM inches	F A

FIGURE 28

FROM THE PORT OF TO THE PORT OF

ACTUAL								
F.W. DRAFT ft. in.	WATER DENSITY	F.W. corr	S.W. DRAFT ft. in.	DRAFT ERROR	L H	TRIM ERROR	F A	ROLL sec's

FIGURE 29

Utilization of Short Form

The Short Form in the Trim and Stability book may be used for the following calculations:

determination of arrival condition
check of estimated loading
calculation of departure condition
calculation of day to day stability
calculation of data for use of flume tanks

Considerations—Container Loading

The container loading operation is basically vertical loading rather than horizontal loading or flooring off. The operation in general is a 1 & 1 system i.e. 1 container loaded and 1 container discharged in the same cycle. Some of the containers to be loaded are still on the road when the ship docks. In other words, there is a greater tonnage selection opportunity with break bulk cargo at the start of loading than there is with container cargo. Container cargo has 3 variables:

port
weight
refrigeration

Break bulk has many more variables such as:

port
weight
crushability
sweat
inherent vice
available dunnage
shoring
lashing
chocking

Over stowage is almost never a problem on container ships according to the loading personnel. Heeling is closely watched, however, because this leads to problems with the cell guides. Reefer containers are stowed on deck adjacent to electrical outlets and where temperatures may be checked.

Procedure—Stability

Calculate Lightship operational condition
Sound tanks
Determine tankage and free surface for arrival condition
Calculate sub total condition on long form sheet
Contact loading personnel and give them copy of (long form) arrival sheet (with sub total calculated)
Give loading personnel copy of limiting vertical moment curve with limit marked in red

Update long form trim and stability sheet for stores, liquids, etc.
When cargo totals are received from loading personnel
enter in long form stability sheet
Calculate– GMt corrected (available)
GMt required
GMt margin
trim
drafts
rolling period
fresh water allowance
Check departure data on long form sheet with T&S book short form
Endeavor to roll ship to determine GMt before departure from dock.

Procedure-Longitudinal Strength

If ship is of sufficient length and longitudinal strength is a factor, the Trim and Stability book will provide data for checking on this situation. In general, the Trim and Stability books will have a Longitudinal Strength table laid out similar to the one described in Section III-22 of this book. Where longitudinal strength is a factor proceed as follows:

1. Calculate Bending Moment numeral for Arrival condition.

2. Calculate Bending Moment numeral for anticipated Departure condition.

3. Calculate Bending Moment numeral for out port cargo operations. If satisfactory Bending Moment numeral is not arrived at, call this to attention of loading personnel.

4. Calculate Bending Moment numeral for finalized Departure condition.

Conclusion–Because of the nature of the trade and the ships involved many new and unique considerations have arisen. Because of quick turn around ship's officers must have accurate knowledge of Arrival condition. Ship's officers must work very closely with loading personnel. On most container and barge carrying ships longitudinal strength is a factor and this is a new consideration on most cargo ships. Because of the broad range of stability on these ships stability must be controlled. Accurate and continual knowledge of ships' condition is a must because of safety, control of rolling periods, and use of flume tanks.

Bibliography

C8-S-68d Trim and Stability Book
C5-S-73b Trim and Stability Book
C6-S-1w Trim and Stability Book

Problems:

1. Using the C5-S-73b Trim and Stability Book turn to the Full Load Departure condition and calculate the following: –

    a. Calculate the Light Ship (Operational) VCG, LCG, and F/S on a long form.

b. Calculate the Sub Total on a long form.

c. Make up a curve of Maximum Allowable Vertical Moments from 14,500 tons displacement to 26,500 tons displacement at intervals of 500 tons.

d. Calculate the Moment to Heel 1° at start of loading operation.

2. Using C6-S-1w Trim and Stability Book turn to Full Load Departure—3 high containers on deck—condition and calculate the following: –

a. Calculate the Light Ship (Operational) VCG, LCG, and F/S on a long form.

b. Calculate the Sub Total on a long form.

c. Make up a curve of Maximum Allowable Vertical Moments from 17,500 tons displacement to 26,500 tons displacement at 500 ton intervals.

d. Calculate the Moment to Heel 1° at start of loading operations.

C-12 BARGE CARRYING SHIP OPERATION

The "Barge Carrying" type ship is a new concept in the field of seagoing cargo carriage. These ships are capable of carrying both barges and containers. The ships are self loaders and unloaders, with a crane for containers and barges in the "LASH" operation, and an elevator for loading barges in the "SEABEE" operation. "Barge Carrying" ships are designed for port to port operations and as an additional feature the barges can be moved on inland rivers and streams with a minimum depth of nine (9) feet of water in the case of the "LASH" system. The shipper now has a flexibility to the services that are available. If the cargo is containerizable, it may be placed in a container and trucked to the ship. The container could also be placed aboard one of the ship's barges and transported to the ship by water. There has always been a large quantity of low freight rate non bulk cargo. Most of this cargo was transported on chartered vessels when a sufficient quantity was on hand. This resulted in warehousing costs until an available ship and the quantity of cargo coincided. Now amounts as low as 350 tons can be shipped by barge.

This type of ship presents new problems to the deck officer. Some of these problems are the following:

quick turn around
quick, frequent, and accurate stability calculations are required
it is difficult to load by eyeball
cargo is generally worked while ship is anchored
minimum trim and 0° heel are important for good cargo working conditions

Operational considerations:

loading in home port laid out by terminal personnel
loading in out ports must be calculated by ships personnel

data on cargo to be loaded at next port presented to ship in preceeding port
in loading cargo an effort is made to work one hold as much as possible to avoid opening hatch covers as this operation takes 20 minutes to move hatch covers to another hatch
the cycle of loading or discharging barges is about 15 minutes, this time is increased by the time needed to jockey barges alongside into position
even keel is the ideal condition for cargo operations. To have an even keel trim it's best to have a slight trim by the head before cargo operations start
ships that are moored can discharge cargo when a 4′ - 6′ swell is running, but this is the limit for safe working conditions
the cranes must be jacked up off their bearings hydraulically and secured in their proper place before proceeding to sea as the cranes stowed in their right locations are part of light ship
turnbuckles that are used to secure deck loads must be checked and slack taken out of them every day by ships' personnel

Operation

The barge carrying ship is an extremely complicated ship to load and discharge within the framework of the available and required trim and stability by reason of the following:

types of cargo carried
quick turn around
handling cargo at anchorage
loading and discharging over stern
loading and discharging abeam
time involved in opening and closing barge carrying holds

Types of cargo carried:

barges
containers
bulk
cargo oil
heavy machinery (as a deck load)

Quick turn around

because these ships can load a barge in 15 minutes or 1600 tons an hour the time spent in port may be as little as 2 hours. The loading rate might be further increased by the loading simultaneously of containers, bulk, cargo oil, or heavy equipment or machinery as a deck load.

Handling cargo at anchorage

in almost all ports the ship will be anchored or moored to a buoy and barges will be loaded or discharged over the stern. Containers, cargo oil, and heavy equipment or machinery will be handled from or to barges abeam of the ship. The sea that is running and the height of

the swells will be a factor in the cargo operations. Added to the 15 minute barge loading or discharge cycle will be the time spent maneuvering barges into position.

Loading and discharging barges over stern

Trim, heel, the state of the sea, and the amount of rolling will be a factor in the handling of barges over the stern. In calculating trimming moment the weights of the crane and barge X distance must also be considered. The longitudinal strength numeral should also be calculated for the most extreme conditions of loading while at the mooring and at sea after departure. The GMt will temporarily be decreased as the barge is discharged or loaded and is transported longitudinally in a two blocked position by the gantry crane. This temporary reduction in GMt is not likely to be a problem on these well designed ships, unless large quantities of free surface, minimum liquids in double bottoms, and other poor operating practices are present. For optimum operation of barge loading, gantry crane inclination due to trim should be kept to a minimum. It may also be a good cargo handling practice to have the ship trimmed slightly by the head before start of cargo operations.

Loading and discharging abeam

All cargo except barges and possibly heavy machinery or equipment will be loaded abeam. If the ship is anchored, containers, grain, and cargo oil will be handled from or to barges moved alongside. Care should be taken to keep heel, free surface, and rise in V.C.G. whether for a short period or a longer period to a minimum.

Conclusion

The "LASH" type (C8-S-81b) ships, the only barge carrying ship type that we have been exposed to up to this date, are sophisticated ships in the extreme. These ships were designed by an outstanding designer. His staff spent much time evaluating the problems and needs of the operators. In consequence of these efforts, we now have ships that perform operations and solve problems that were previously unheard of.

These ships, however, do not run themselves and the deck officers still have much to be observant of. As a matter of fact, for optimum operation the following must be watched closely:

draft
trim
GMt available
GMt required
free surface–liquids
free surface–grain
longitudinal strength
moment to heel 1°
heeling moment
heel

Bibliography

C8-S-81b Trim and Stability Book

Problems:

1. In the 0% Cargo–100% Consumables condition the gantry crane moves aft to pick up a fully loaded barge from the sea. Assume the ship to be the C8-S-81b type "LASH ITALIA." Assume the crane weighs 425 tons and is 332′ aft of normal stowed position. Assume weight of barge and cargo is 400 tons.

   a. When the barge is lifted clear of the sea, what will be the temporary change in trim?
   b. What will the sinkage be?
   c. If the barge is stowed in hold #4 and crane returns to stowed position, what will the sinkage be?

2. In the 100% Cargo 10% Consumable Arrival condition, if the flume tanks were dumped and loaded and empty lighters on deck were discharged, what would the following characteristics be changed to:

   KG
   GMt
   draft
   T.P.1″
   M.T.1″

C-13 DAMAGED STABILITY

Damaged Stability

The plot showing GM available and GM required vs. draft should always be referred to when setting up operating conditions on the ship. In the design stage it is proof that the ship will be capable of withstanding damage of the assumed standard of severity.

"Definition of Damaged Stability"

Flooding or free opening of any buoyant part of a ship to the sea, will affect the transverse stability as well as the longitudinal stability of the ship and in general will result in a change of draft, trim and angle of heel.

When a ship is damaged below the waterline many changes in the ship's characteristics take place:

Loss or gain of buoyancy
Sinkage
Rise of Center of Buoyancy
Loss of Water Plane
Change of Trim
Gain in Stability thru Form Gain
Heel to specific Angle

At the time of damage it is important for operating personnel to take the necessary steps which will increase the likelihood of survival. This will hopefully lead to an equilibrium condition after flooding has ceased, which approximates one of the conditions assumed by the designer and hence the vessel should not capsize.

No attempt will be made to discuss damage control at this point.

"Maritime's Standard"

Ships should be capable of surviving the final stage of flooding of any 1 compartment at any time during the voyage.

Ground Rules for Doing Damaged Stability Analysis

1. Longitudinal extent of damage should be equal to 10′ + 3% of the subdivision length of the vessel or 35′ (whichever is less including 1 main bulkhead).

2. The transverse extent should be equal to 1/5 of the maximum beam measured inboard from the ship's side at the level of the deepest subdivision load line.

3. The vertical extent should be from top of the double bottom or (bottom of the keel) to the margin line whichever is most extreme.

4. Permeabilities should be as follows:

Spaces	Permeability
Cargo or Stores	60
Machinery Space	85
Liquids	0 or 95
Crew or Pass. Space	95

The best known hand methods are the "Lost Buoyancy" (MarAd) and "Added Weight" (Coast Guard).

It is assumed in the Lost Buoyancy method that the draft, trim, and heel in flooded condition after equilibrium has been established can be calculated by starting with an assumed service condition, calculating the lost buoyancy due to a compartment or compartments being opened to the sea, and equating that lost buoyancy and its moment to the buoyancy gain and moments accompanying sinkage, trim and heel of the remaining intact part of the ship. Alternatively, one may assume an equilibrium damaged condition waterline, calculate the flooding water up to this waterline, and subtract it and its moments from the total displacement and moments up to this waterline in order to obtain a corresponding before damage condition.

The 2nd method is known as the trim line added weight method. This is a misnomer since water in spaces open to the sea and free to run in or out does not actually add to a vessel's weight. For calculation purposes it is convenient to regard such flooding water as adding to the displacement.

Since the trim line added weight method involves a direct integration of volumes up to the damaged condition water plane, it is just as well adapted to dealing with complex flooding conditions.

It is now time to discuss the "Lost Buoyancy" method as used by the Maritime Administration.

The Lost Buoyancy method consists of the following steps:

calculation of lost buoyancy
calculation of heeling moment
calculation of total transverse moment
calculation of lost area due to lost water plane area
calculation of residual tons per inch immersion
calculation of lost inertia at new damaged draft
calculation of trim and sinkage correction
calculation of final trim and draft due to the damaged sections—new drafts
calculation VCB rise and net KM reduction
calculation of final summation for loss in "GM" due to flooding and the required "GM" necessary to limit heel to a specified angle

Effects to be considered in Damaged Stability Calculations:

KB rise due to sinkage
KB rise or fall due to trim
BM loss due to loss of water plane
BM gain due to sinkage
BM gain due to trim by the stern
BM loss due to trim by the bow

Damaged effects which must be determined:

Approximate determination of sinkage and trim and the drafts fore and aft after damage.

Effect of free surface. Allowable angle of heel in the damaged condition.

Some of the items and critical areas that must be considered when analyzing damaged stability:

Areas 1/5 of beam from ship's side
Wing tanks
Height of flat
Uncrossconnected tanks
Large water plane areas with uncrossconnected tank below
Large water plane areas that have compt's. or store spaces that are watertight
Large sail area above waterline

It is not expected that ship's officers will have the time to carry out the vigorous analysis outlined. However, ships officers should understand that such calculations were carried out in great detail as the ship was being designed. If the ship is loaded in such a manner at all times and the GM available values are achieved then the ship will be able to survive should a damaging accident occur.

GLOSSARY

BM – Symbol for metacentric radius, distance between B & M.

Center of Buoyancy (B) – That point at which all the vertical upward forces of support buoyancy can be considered to act.

Center of Flotation – Center of gravity of the waterplane. The axis about which a vessel trims.

Center of Gravity (G) – That point at which all the vertically downward forces of weight can be considered to act; it is the center of mass of the vessel.

CG – Weather Criteria – The specific GM required at any draft to limit heel to a specific angle of heel as a result of wind of a certain force acting on sail area of ship and resisted by water pressure on underwater area of vessel.

Cross Flooding – Ducts that connect a pair of tanks or spaces are used to equalize unsymmetrical heeling moments that exist in consequence of damage.

Down Flooding – Use of a device that permits damage water to flow down to a lower level when ship is damaged assisting in a KB rise.

Equalization – Equalizing transverse heeling moments through cross flooding or loading liquids.

Extent of Damage – In analyzing Damaged Stability it is assumed that extent of damage is 1/5 Beam-transversely, .03 L + 10′ or 35′ whichever is least–longitudinally, and from keel or tank top to margin line whichever is most extreme–vertically.

Floodable Length – The maximum length of compartment which can be flooded without causing the ship to sink and whose compartment midlength is at the point in question.

Form Gain – When the vessel is damaged there is usually a gain in stability in consequence of the shape of the vessel. At the deeper draft–this is known as form gain.

Free Surface – Whenever the surface of a liquid within a vessel is free to move the condition known as free surface is present.

GMt – Vertical distance that transverse metacenter (KM) is above center of gravity (KG)–This is used as a measure of stability.

GMt Available – The amount of GMt, corrected for free surface, which a ship has in any loading condition.

GMt Required – The amount of GMt corrected for free surface that a ship is required to have at any draft to meet the damaged stability requirements.

Inclining Experiment – The inclining experiment is a method of determining the vessels center of gravity usually for the light condition. It is performed by moving a known weight a known distance across the deck, determining the angle of heel the vessel assumes and with these values solving for GMt. Deduct GMt from KMt and the result will be KG.

KG – Center of gravity distance above keel measured vertically.

KB – Center of buoyancy distance above keel measured vertically.

Loss of Water Plane – The plane defined by the intersection of the water in which a vessel is floating with the vessel's sides. The loss is in the way of the damaged area. Directly affects the TPI and the BM.

Margin Line – A line defining the highest permissable location on the side of the vessel of any damaged water plane in the final condition of sinkage trim and heel. Generally located 3″ below highest deck to which W.T. Bhds extend.

One Compartment Standard – The ability of a ship to survive the final stage of flooding at any time during any voyage when 1 compartment has been damaged.

Permeability – Is the percentage of the total surface area or volume of a flooded compartment that can be occupied by damaged water.

Rise of Vertical Center of Buoyancy (KB) – This is nearly always positive and is composed of (2) parts. VCB change due to sinkage and to trim.

Run Out – When a tank containing liquid is damaged the liquid runs out and may be replaced with a lesser or greater amount of damage water, resulting in problems concerning loss water plane, lost area, heeling moment, sinkage trim and change in KB.

Sail Area – Projected Lateral Area of profile of ship above waterline upon which wind exerts a pressure.

Stability – The tendency of a vessel to return to its original position after it has been inclined due to external forces.

Unsymmetrical Flooding – Flooding in such a manner as to set up a transverse moment involving the possibility of capsizing unless the vessel has sufficient stability to limit heel.

Because damaged stability analysis is a complicated problem we shall not endeavor to work an example problem but shall show a sample calculation. Suffice to say that the curve of GMt required for damage to a specific compartment at a specific draft is based on Lost I @ d2, Gain in I due to trim and sinkage, Rise of CB due to Lost Buoyancy and GMt required to Limit Heel.

If a problem were to be presented and worked as an example it would have to be of the simplest sort and would not be indicative of the damage situations that do occur.

USCG Weather Criteria

The required minimum metacentric height (GM) in feet at any particular draft is obtained from the following formula:

$$GMt = \frac{PAh}{\text{displ. tan. } \theta}$$

where $P = .005 + \left(\frac{L}{14{,}200}\right)^2$ tons/ft.^{2} for ocean and coastwise services

L = Length between perpendiculars in feet

A = Projected lateral area in square feet of portion of vessel above water line

h = Vertical distance in feet from center of A to center of underwater lateral area or approximately one half draft point

Displ. = Displacement in long tons

θ = Angle of heel to ½ the freeboard to the deck edge or 14° whichever is less

Stability and Trim for the Ship's Officer–La Dage and Van Gemert
Questions: Page 121 questions 1, 2, 3, 4, 5, 6, 7, 8, 9, 10, 11

FORM MA-357
(6-54)

U.S. DEPARTMENT OF COMMERCE
MARITIME ADMINISTRATION

DAMAGED STABILITY

COMPTS FLOODED: Engine Rooms

DRAFT d_1 20'-0"

DISPL. Δ_1 14,000 tons

NOTES: Wing tanks empty.
"B" Deck assumed Bulkhead deck throughout.

DESIGN: M. S. Willem Ruys L-
DATE: 3/24/48 CALC. BY: LFR
CHECK BY:
APPR. BY:

LOST BUOYANCY

SPACE	ITEM	μ	TONS	KG	LCG	TCG	T.M
Engine Rooms	129 x 68 x 14.5 ÷ 35	.85	3090	12.8	8.0A	0	-
Wing tank- stbd.	82 x 7 x 14.5 ÷ 35	.95	226	13.0	7.5A	37.5	8475
		Ⓐ	3316	12.8	8.0A	T_V	8475
				HEELING MOM Ⓐ x q			2918
				TOTAL TRANS. MOM. T			11393

LOST AREA

LOST AREA @ d_1	μ	TONS/IN LOSS	LCG	TCG	TM
129 x 68 ÷ 420	.95	19.8	8.0A	0	-
82 x 7 ÷ 420	.95	1.3	7.5A	37.5	49
	a	21.1	8.0A	T_A	49

LOST INERTIA @ d_2	μ	$\frac{\mu i}{35}$	$\frac{\mu i}{35\Delta}$ FT.
$1/12 \times 129 \times 68^3$	.95	91748	6.55
$(1/12 \times 82 \times 7^3)_+$			
$(82 \times 7 \times 37.5^2)$	.95	21968	1.57
		TOTAL INERTIA LOSS	8.12

TONS/IN @ d_1 A	77.0	TR. SHIFT OF CF, $T_A \div (A-a) = q$	.88	SINKAGE $BM_2\Delta_2 - BM_1\Delta_1$		
TONS/IN LOSS a	21.1	BM_1	27.9	TRIM & SINKAGE $L/35$	45510	3.25
TONS/IN RESID. A-a	55.9	NET BM LOSS	4.91	SHIFT OF CF, $12(A-a)\,q^2$	562	.04
		RESIDUAL BM_R	22.99	NET BM LOSS		4.91

FIGURE 30

TRIM			
CF@ d_2	23.0A	$h = \frac{H \times a}{A - a}$ $\frac{15 \times 21.1}{55.9}$	5.7A
-LCG a	8.0A	LENGTH OF DAMAGED AREA S	129'
H	15.0	S^2	16641
CF@MEAN DR.	16.0A	MT1"@ d_2 TONS FT. M_2	2355
+ h	5.7A	$\frac{AHh}{L} = \frac{77 \times 15 \times 5.7}{609.8}$	11
	21.7A	$\frac{aS^2}{12L}$, $\frac{21.1 \times 16641}{12 \times 609.8}$	48
-LCG Δ	8.0A	RESIDUAL MT1", M_R	2296
Y	13.7F	TRIM FT = $\frac{Y \times \Delta}{12 \times M_R}$ $\frac{13.7 \times 3316}{12 \times 2296}$	1.6F
CF@ d_2	23.0A		
+ h	5.7A		
CF DAM	28.7A		

VCB RISE					
LOST BUOYANCY Δ	3316	d_1	20.0		
INITIAL DRAFT d_1	20.0	½P	.2.45		
$\frac{\Delta}{12(A-a)} = \frac{3316}{12 \times 55.9}$ P	4.9		22.45		
		-KG	12.8		
d_1 + P d_2	24.9	y	9.65		
RISE DUE TO SINKAGE FT. $\frac{\Delta \cdot y}{\Delta}$ = $\frac{3316 \times 9.65}{14000}$				2.28	
RISE DUE TO TRIM FT. $\frac{GM_R t^2}{\Delta L}$ = $\frac{1.6^2 \times 2296 \times 6}{14000 \times 609.8}$				.04	
TOTAL RISE OF CB FT.					2.32
NET KM REDUCTION FT.					2.59

DRAFTS	F.P	AP
DAMAGE DRAFT d_2	24.9	24.9
TRIM t	+ .9	- .7
FINAL DRAFTS	25.8	24.2

FUNCTIONS			
Θ	SIN Θ	TAN Θ	K_1
7°	.122	.123	.0074
15°	.259	.268	.0323

$K_1 = K/100 \text{ SIN } \Theta$

HEEL					
ASSUMED ANGLE OF HEEL Θ		15			
GM REQ'D. TO LIMIT HEEL T/Δ TAN Θ		2.66			
K/100 SIN Θ K_1		.0323			
GM ALLOWANCE FOR FORM BM & K_1		.74			
NET GM REQ'D TO LIMIT HEEL		1.92			1.92
TOTAL INITIAL GM REQUIRED TO LIMIT HEEL TO 15°					4.51

FIGURE 31

TRIM & SINKAGE CORRECTION — HEEL TO MARGIN LINE

STA	SM	HB@ d_1	HB^3	DAM. DR.	HB	HB^3	M.L.	FRBD	HB@ ML	TAN Θ
0	½	0	-	25.8	0	-				
1	2	2.8	22	25.72	4.1	69				
2	1½	8.2	551	25.64	9.6	885				
4	4	20.4	8490	25.48	22.8	11852				
6	2	32.1	33076	25.32	33.9	38958				
8	4	40.1	64481	25.16	40.4	65939				
10	2	41.0	68921	25.0	41.0	68921	47.2	22.2	40.0	.276
12	4	40.8	67917	24.84	41.0	68921				
14	2	38.9	58864	24.68	40.0	64000				
16	4	30.0	27000	24.52	34.0	39304				
18	1½	13.9	2686	24.36	19.0	6859				
19	2	4.4	85	24.28	9.0	729				
20	½	0	-	24.2	0	-				
		fI_1 = 998343.5			fI_2 = 1101034		ANGLE OF HEEL			15.5°

S = 60.98

$\frac{i}{35} = \frac{fI_2 - fI_1}{35} \times \frac{2S}{9} = 45510$

KM correction for trims Less than 5'-0" $\frac{B^2 \times t}{10 \times d_2 \times L}$

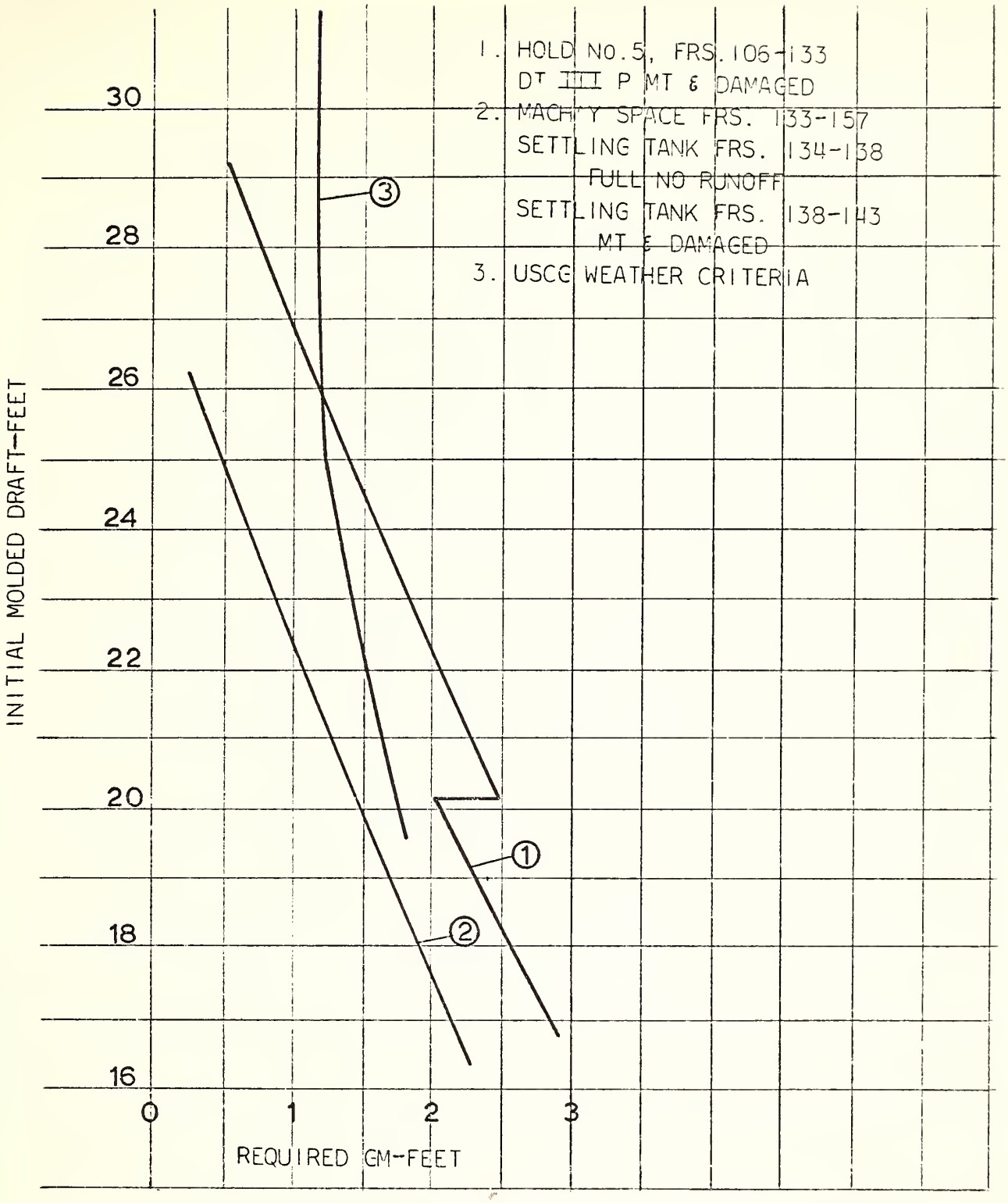

DAMAGED STABILITY-CURVES OF
GMt REQUIRED vs DRAFT

FIGURE 32

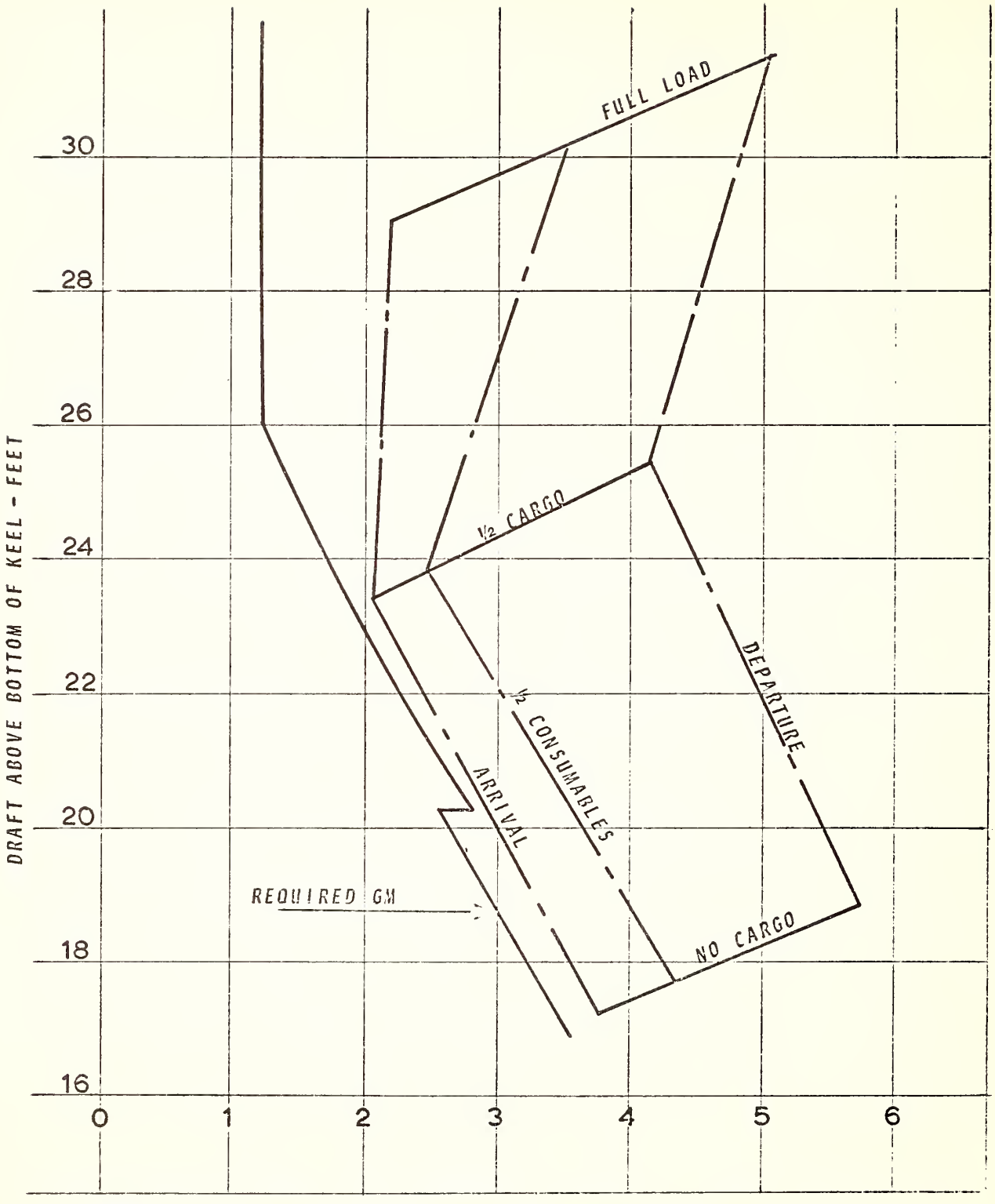

FIGURE 33

CURVES OF AVAILABLE & REQUIRED GM-FEET

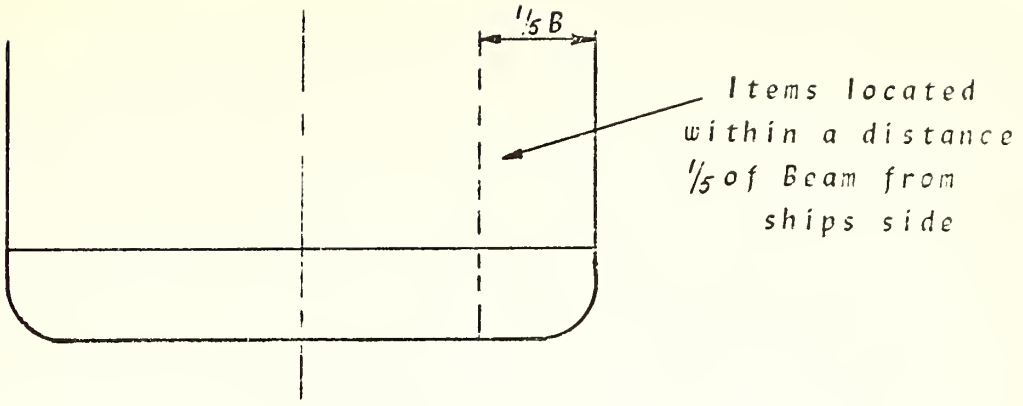

FIGURE 34

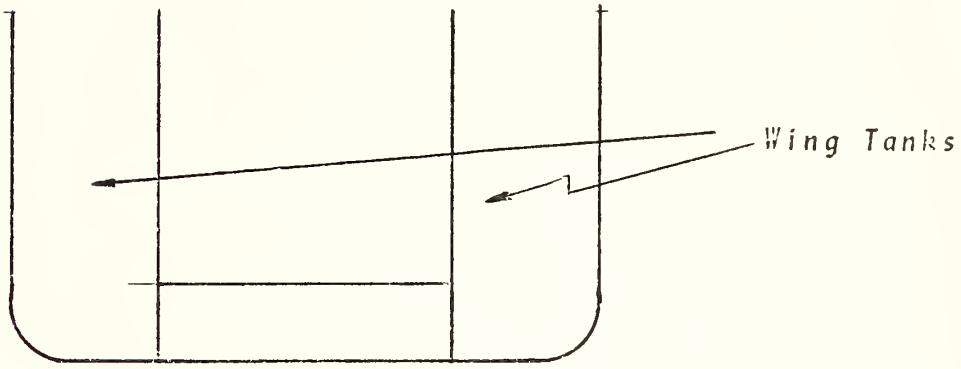

FIGURE 35

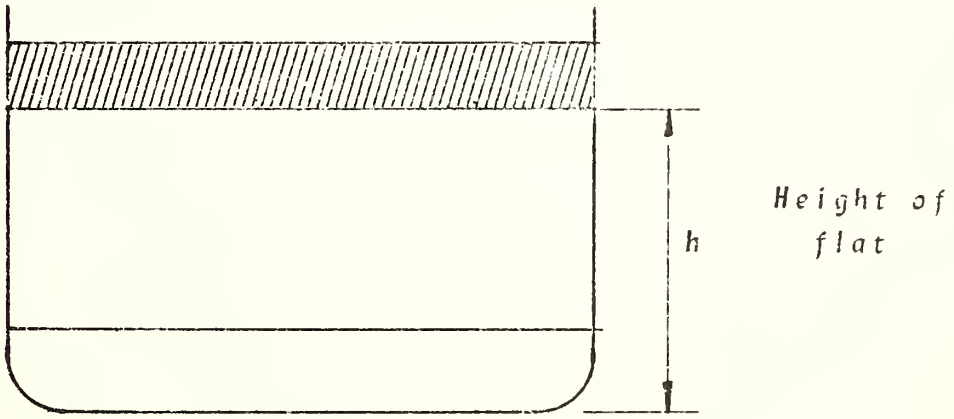

FIGURE 36

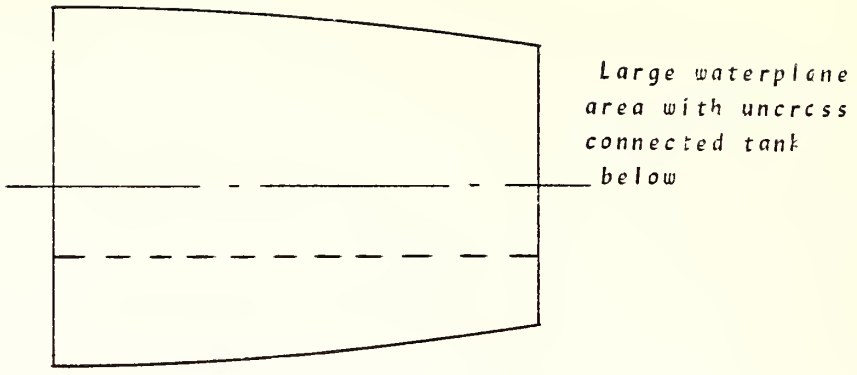

FIGURE 37

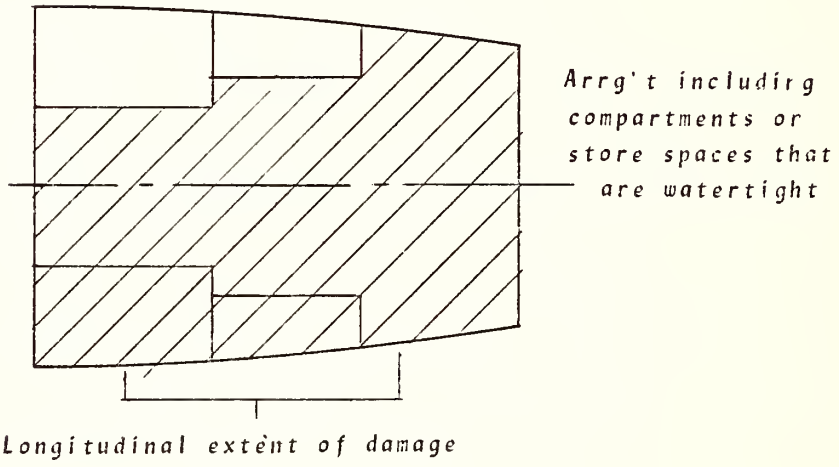

FIGURE 38

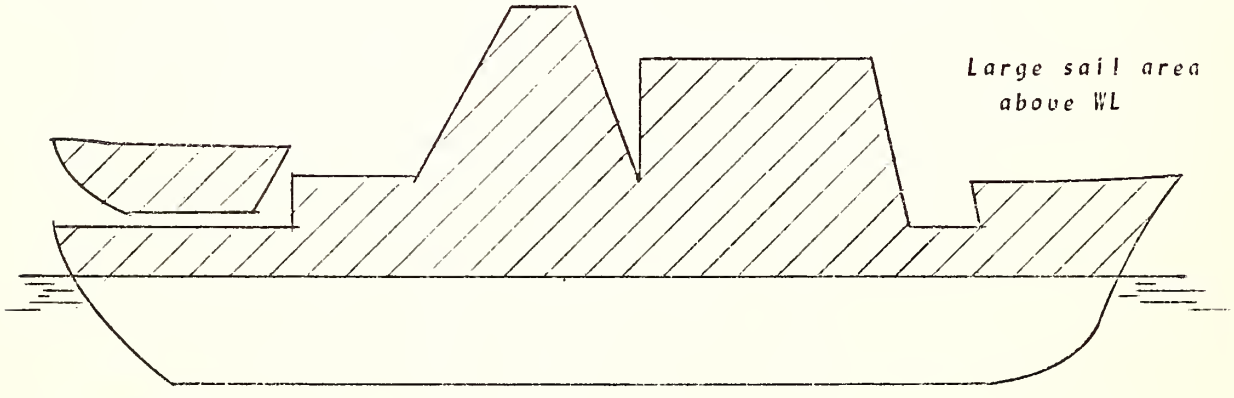

FIGURE 39

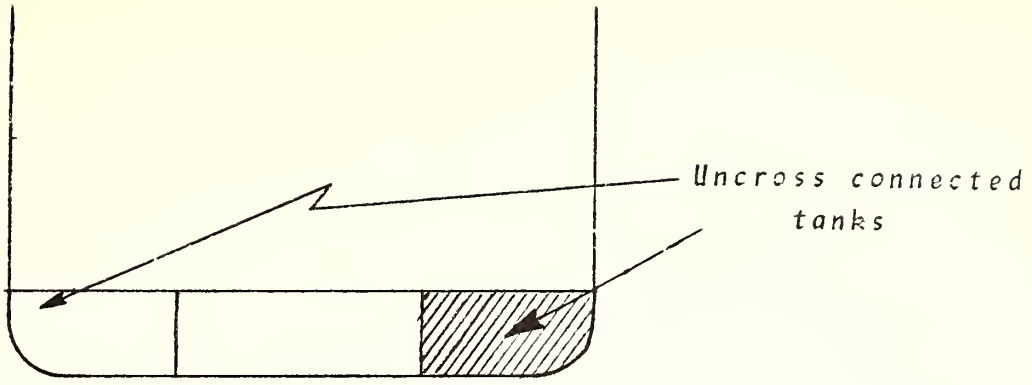

FIGURE 40

TRIM & STABILITY BOOK

PART II – 14 INSTRUCTIONS & ROUTINE OPERATING INSTRUCTIONS

The Trim and Stability Book is approved by U.S.C.G. and the Maritime Administration. In effect it is the deck officer's bible as regards the operation of the ship. It is a complete entity and contains data from the Lines, Inclining Test, Deadweight Certificate, Capacity Plan, Hydrostatics, Tank Capacity Table, Intact Trim and Stability Calculations, and Damaged Stability Calculations. It will also contain data from U.S.C.G. Regs., and National Cargo Bureau Regs.

Basically the book is composed as follows:

Index
Vessel Characteristics
Instructions – General
– Computation of Vessels T&S (long form)
– " " " T&S (short form)
– Routine Operating
– Special Cargoes
– Calc. of VCGs of Deck Cargo
Table of Hydrostatics
Trim Table and Example
Table of Approx. Gain in G.M. by Ballasting Tanks
Composite Curve of GMt Required
Tank Capacity & Free Surface Data
Cargo Space Capacity Table
Typical Loading Conditions (long form)
Nomogram – Short Form
Short Form Example

One of the more important parts of the book is the section in the beginning marked "Instructions". The Instructions are in effect the ground rules under which the ship will be operated. The "Instructions" will be tailored to the particular ship and will be checked very closely by the U.S.C.G. and MarAd, as will the rest of the book.

Some of the highlights of typical container ship instructions are as follows:

1. Instructions are intended to aid personnel in maintaining satisfactory stability.

2. Cargo conditions shown in book represent cargo loadings having similar tonnages and VCG's to those shown.

3. Long form used for calculating vessel's trim and stability shall list commodities listed on tables shown on specific pages.

4. Slack free surface shall be entered for the settlers.

5. Slack free surface entered for the consumable liquid storage tanks shall result in a sum not less than the tank pair values which are the largest for each type of consumable liquid being used. This will allow tankage to be consumed in any order.

6. All other 98% full fuel tanks shall have 98% - 5° heel free surface values entered.

7. In the separate loading tables each category is summed with respect to tonnage, vertical moment, longitudinal moment, and free surface.

8. Mean draft equivalent to displacement is used to enter table of hydrostatics to determine KM, LCF, and LCB.

9. Vertical and longitudinal centers of gravity of containers are as shown on the container loading table.

10. Cross connections between all port and starboard double bottom and deep tank pairs shall be kept closed when carrying liquids, and open when empty.

11. Excluding the fuel oil settlers not more than one pair of tanks assigned to each type of consumable liquid on board the vessel shall be slack at one time.

12. Bilges shall be kept pumped to minimum content at all times.

13. Tanks required to be ballasted with salt water shall be immediately filled and carried pressed up at all times.

14. When not ballasted such tanks shall be kept pumped to minimum content at all times.

15. During the ballasting a reduction in the vessel's GMt due to slack free surface will occur until the tanks are pressed up. This temporary loss in GM (in feet) is equal to the salt water free surface of the tank divided by the vessel's displacement (in cubic feet) at that instant of loading.

16. When the available GMt calculated by the short form method comes out less than the required GMt three alternatives shall be used to correct this condition:

a. Check by the long form method. Then if the available GMt is still less than the required GM, use either of the following corrective measures:

b. Add ballast where available.

c. Add ballast as required and then fill the roll stabilization tanks to suit displacement and GMt of the vessel.

Conclusions:

I. Avoid excessive GM (transverse). In other words, load the ship with enough GM to give a slight margin over GM required, but not more than this. This may lead to a GM slightly less than given by the GM available plot, but as long as it is not as low as the GM required we have not in principle, jeopardized the ability of the ship to survive damage, and we should have reduced the likelihood of severe rolling somewhat.

II. Unless there is guidance to the contrary in the trim and stability book, load the heaviest containers in the middle of the ship, and the lightest ones at the ends. This should help reduce the likelihood of severe pitching somewhat, by reducing the longitudinal radius of gyration. These conclusions were extracted from "Guideline for Deck Stowage of Containers" produced by J.J. Henry for the Maritime Administration.

Texts: U.S.C.G. sample Trim & Stability Book
C7-S-68d Trim & Stability Book
C5-S-73b Trim & Stability Book
C8-S-81a Trim & Stability Book

Questions:

1. What do the instructions state in regard to GMt values?
2. What is the purpose of the T&S book?
3. What type of free surface is entered for fuel oil settlers in calculating vessel stability?
4. What should the sum of the slack free surface of the consumable liquid storage tanks be not less than?
5. What free surface shall all fuel oil tanks (that are not slack) have entered for them?
6. What instructions are given for cross connections?
7. Excluding the fuel oil settlers, how many pair of tanks assigned to each type of consumable liquid may be slack at one time?
8. When the available GMt as calculated by the short form method comes out less than that required what 3 alternatives are available?

15 TANK CAPACITY & FREE SURFACE TABLE

Explanation of Table

This table in its simplest form is laid out to contain the following:

Name of tank
Location (frames)
Capacity (ft. 3)
Capacity (tons)/liquid
V.C.G.
L.C.G. from amid ships or F.P.
Free Surface–slack for all tanks
Free Surface–98%–5° heel for fuel oil and cargo oil
Free Surface for flume tanks is at operating level

In the case of container and barge carrying ships with extensive tankage the tanks are generally grouped in the table by the liquid they will carry as follows:

Salt Water Ballast tanks
Fuel Oil and Diesel Oil tanks
Fresh Water tanks
Liquid Cargo tanks
Miscellaneous tanks

Flume Tank Free Surface Diagram

An adjunct to the free surface table is the Flume Tank Free Surface Correction diagram.

This is based on the flume tank's free surface correction vs the level of liquid in the tanks. The level of liquid in the tanks is shown vertically. The moment of free surface in foot tons is shown horizontally on the bottom of the diagram.

The free surface is shown as actual moment and maximum effective moment. Maximum effective moment is based on the U.S.C.G. method of calculations. Actual moment is based on full free surface calculated as the moment of inertia of the liquid free surface.

The table of capacities and free surfaces will show a free surface correction in the slack condition that will be more conservative than will be read on the diagram.

Use of Table

1. The table will be used to provide V.C.G., L.C.G. and free surface values for tankage as input in long form trim and stability calculations.

2. To provide tank tonnage as input for short form trim and stability calculations.

3. To provide tank tonnages as input for calculating trim by the use of the trim table.

Bibliography:

1. U.S.C.G. sample Trim & Stability book
2. C7-S-68d Trim & Stability book
3. C8-S-81b Trim & Stability book

16 GAIN IN GMt BY BALLASTING – TABLE

The "Gain in GMt by Ballasting Table" is one of the handiest and most useful tables in the Trim & Stability Book. Basically the table is as follows:

The tanks are listed horizontally.
The displacement is listed in even increments vertically.

The results are the increase or decrease in GMt in terms of feet of GMt. In working up the table a base KG is derived from the difference between required GMt curve and the KM taken from the hydrostatic table in the T&S book. Specific displacements are chosen and the effect of ballast tanks on the KG are calculated. It should be stressed that this is only a guide and should not be used as a shortcut measure to determine the available GMt of a ship.

Using the C7-S-68d Trim & Stability book turn to the "Gain in GMt by Ballasting table". What will the gain in GMt be if we ballast #3 ¢ double bottom tank in the "Arrival–No Cargo–10%

$$\text{FREE SURFACE CORRECTION} = \frac{\text{MOMENT OF FREE SURFACE (SUM OF TANKS USED)}}{\text{DISPLACEMENT } (\Delta)}$$

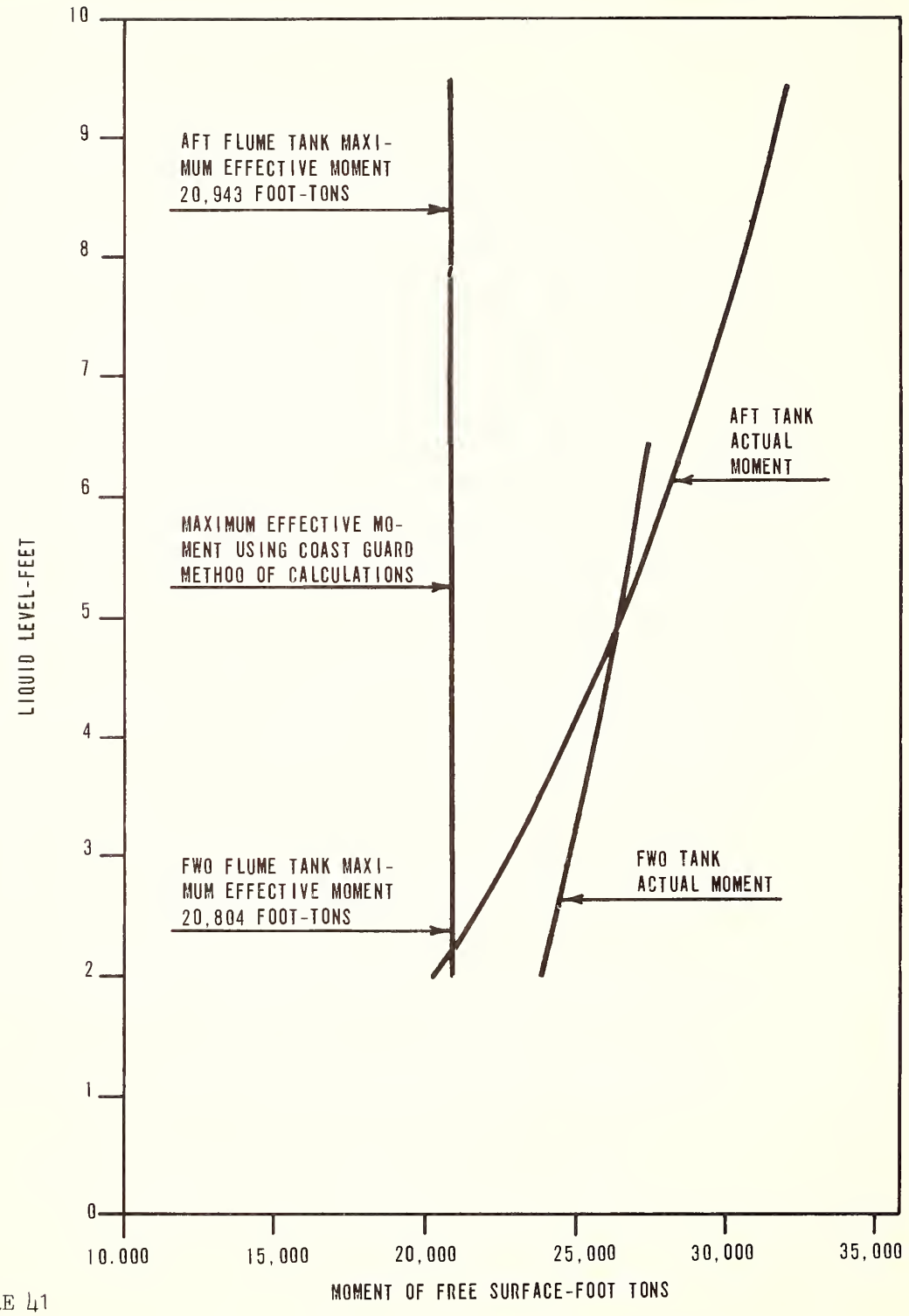

FIGURE 41

FLUME TANK FREE SURFACE CORRECTION

Consumables" condition. This condition has a displacement of 16,299 tons. Double Bottom #3 ℄ has a 100% capacity of 473 tons of SW. If we enter the table with this displacement and tankage we arrive at a gain in GMt of 0.48′.

Precaution:

Before starting to ballast certain facts must be considered: ———

a. What is the present GMt?
b. What is the GMt required?
c. What is the slack free surface correction for the tank to be ballasted?
d. What will the trim be as a result of ballasting?

Solution:

a. The present GMt may be calculated by long form or short form.
b. GMt required may be read from "Curve of GMt Required vs Draft".
c. Slack free surface correction is read (because it will be maximum) from table of tankage.
d. Trim is determined from trim table.

Reasons:

a. GMt of ship should be known at all times.
b. GMt required should be known to determine if ship has required stability.
c. The free surface should be known to determine what condition the ship is in during the ballasting.

Problems

1. Using C7-S-68d Trim & Stability Book determine what effect deballasting #2 double bottom ℄ tank would have on available GMt, in Arrival Full Cargo, 10% Consumable condition.

2. Using C7-S-68D Trim & Stability Book determine what effect deballasting would have on available GMt in Arrival – No Cargo, 10% F.O & Stores condition.

17 TRIM TABLE

Explanation of Table

This table is extremely handy for solving trim problems. It is designed to show the changes in drafts at the forward and after draft marks. The table is worked out for two mean drafts. Interpolation is required for mean drafts in between these drafts. The table is located below a profile of the ship and is laid out for even increments of distance. Below these distance marks are boxes showing the

change in draft at the forward and after draft marks. These changes in draft marks are marked with a plus or a minus sign. The table is laid out for loading a specific weight (generally 100 tons). When discharging the same changes in drafts are used but the signs are reversed. The changes in drafts are shown in inches and decimal parts of an inch. If adding or removing large amounts of weight from ship more exact results are obtained by using long form.

Example:

On the C7-S-68d S/S AMERICAN LARK in the "Departure – No Cargo, Full Consumables"–condition 450 tons is loaded in #8 hold at a point 80′ aft of M.P. The drafts at the marks before loading were 24′ 0 1/8″ aft. and 17′ 2 7/8″ fwd. What was the change in drafts due to this operation?

Change in Marks as Calculated

LCF 339.1′ aft of F.P.
415.0′ aft of F.P.–cargo loaded at
76.1′ lever

MT1″ 2690 ft. tons
trimming moment 76.1′ x 450 tons = 34,245 ft. tons
total trim = $\frac{34{,}245}{2{,}690}$ = 12.73″
distance between draft marks 638.0′
trim at fwd. marks .522
$\frac{339.1 \times 12.73''}{638.0}$ = -6.64″
trim at aft marks = 12.73″ - 6.64″ = +6.09″
TP1″ = 88.9
sinkage = $\frac{450}{88.9}$ = 5.03″

change in drafts Fwd. = +5.03″ - 6.64″ = - 1.61″
Aft. = +5.03″ + 6.09″ = + 11.12″

Change in Marks as Per Table

Fwd. drafts 17′ 2 7/8″
Aft. drafts 24′ 0 1/8″
Mean draft $\frac{41' 3''}{2}$ = 20′ 7 1/2″

use table for 20′ mean draft at a point 80′ aft of M.P.
change in fwd marks for loading 100 tons = - .3″
change in aft marks for loading 100 tons = + 2.5″

change in fwd marks for loading 450 tons = - .3" x 4.5 = - 1.35"
change in aft marks for loading 450 tons = + 2.5" x 4.5 = +11.25"

using the table we are able to come up with changes in drafts of - 1 3/8" fwd vs. - 1 5/8" fwd calculated and + 11 1/4" vs. + 11 1/8" calculated at the aft location.

Uses of Table

There is no substitute for calculating the change in drafts but this table gives a very close approximation of the change in drafts.

This table may be used to determine drafts in the following operations:

Loading
Discharging
Ballasting
Shifting liquids
Departure draft problems
Arrival draft problems

Questions:

Using the C7-S-68d Trim and Stability Books solve the following problems:

1. In the "Departure – Full Cargo, Full F.O., Full Stores" condition (page 15) if the following tanks were deballasted

#1 D.B. GL
#3 D.B. GL
#3 D.B. P & S
#4 D.B. GL
#M-1 D.B.

What would the new drafts be?
What would the change in GMt be?

2. In the "Arrival–Full Cargo, 10% Consumables" condition if the containers on deck were discharged? What would the new drafts be?

18 HYDROSTATICS TABLE

The "Hydrostatics Table" is an essential part of the Trim and Stability book. Because the book is a complete entity it must contain sufficient data so that loading, discharging, ballasting, deballasting and liquid transfer problems involving trim, stability and capacities may be solved without reference to other plans, booklets or tables.

The table of Hydrostatics is included to circumvent having to use a "Curves of Form" plan.

The table is laid out with the drafts and data laid out vertically. The table is split into columns. Horizontally across the top of the page is the title of the columns. The mean keel drafts are the extreme left and right columns. The columns in between will contain the following data:

Deadweight–salt water–long tons
Total Displacement–salt water–long tons
Transverse Metacenter above base line–KMt in ft.
(Total) Tons Per Inch–salt water–long tons
Moment to Change Trim one inch–foot tons
Longitudinal Center of Buoyancy–aft of F.P.–feet
Longitudinal Center of Flotation–aft of F.P.–feet

This in general will be the data contained in these tables. The table will be tailored to the ship and its operation.

Some of the additional data can be as follows:

Change in Displacement for 6′ trim–aft
Change in Displacement for 12′ trim–aft
Change in KMt for 6′ trim–aft
Change in KMt for 12′ trim–aft

The table is used by laying a straight edge across between the outboard mean keel draft columns. Read down the appropriate column and read the data at the point where the straight edge cuts across the column.

Bibliography–C7-S-68d Trim & Stability Book. C8-S-81b Trim & Stability Book, U.S.C.G. (sample) Trim & Stability Book

Problems:

1. The C7-S-68d in the arrival–Full Cargo–10% consumables condition has a displacement of 29,351 tons. What will the Tons Per Inch be at this displacement?

2. If the ship in question 1 has a KG of 31.85′ and a displacement of 29,351 tons and the following S.W. Ballast tanks (100% full) are deballasted:

#1 D. B.	P&S	336.6 tons	2.7 ft. VCG
#2 D. B.	℄	459.1 tons	2.4 ft. VCG
#2 D. B.	P&S	295.4 tons	2.7 ft. VCG
#3 D. B.	℄	472.7 tons	2.5 ft. VCG

What is the new displacement?
What is the new uncorrected GMt?

19 CONTAINER STOWAGE TABLE – CALCULATION

The container stowage table and its companion the container stowage plan are standard for container trim and stability books.

The container stowage table is laid out as follows:

Stack, Tier, Cell – In Holds
Stack, Tier, Cell – On Deck

For each tier there is a VCG plugged into the table. This VCG will generally be the same for all holds. When the VCG varies for a specific hold it will be shown. For each tier in each hold there will also be an equivalent L.C.G.

Two vertical columns will show the number of 20′ & 40′ containers in each tier or layer of containers in each hold. Two vertical columns will tally the weight of 20′ containers for tier per hold and 40′ containers for tier per hold. The third of these columns will show the total combined weight of 20′ and 40′ containers for the specific tier throughout all of the holds.

The next two vertical columns will be used for calculating vertical moments. The two columns following are used for calculating longitudinal moment.

This table is used as follows:

The 20′ & 40′ containers are tallied for tier #1 in the holds.

The number of containers and their total weights are entered in their respective columns.

When the total weight for tier #1 has been calculated then the vertical and longitudinal moments are calculated.

This method is followed tier after tier beginning with tier #1 in the lower hold up to the final tier on deck.

The final step is to tally the totals i.e. number of containers, total weight, total vertical moments, and total longitudinal moments.

The container stowage plan generally consists of a profile and 3 plan views of the ship. The plan views will show the arrangement of the containers. This sheet is a guide to the stowage of the containers and is generally blocked out to show graphically the stowage of the containers.

Comments–The utilization of the container Stowage Calculation sheet is simple and is mainly self explanatory. The tremendous number of calculations involved is cumbersome, time consuming, and offers the strong possibility of error.

The utilization of a calculator is almost a necessity. Because of the time involved in performing this calculation electronic and mechanical devices are in the development stage.

Bibliography:

1. C7-S-68d Trim and Stability Book
2. C8-S-81b Trim and Stability Book
3. C5-S-73b Trim and Stability Book

20 LIGHTER STOWAGE TABLE

Lighters in holds are a new development in ship operation. The first class of ships to carry lighters is the C8-S-81b or "LASH" type vessels. We can only refer to the 81b T&S book to see how this vital data is presented as this is the only class vessel now carrying lighters. The 81b class vessels have lighters stowed in holds 2, 3, 4, 5 & 6. Holds 2 & 3 are divided into 3 cells, hold 4 into 1 cell, & holds 5 & 6 into 2 cells each. Each cell has 1 lighter to a tier.

The breakdown of lighter stowage is as follows:

Hold	Cell	Tiers in hold	Tiers on deck
2	A	4	2
2	B	4	2
2	C	4	2
3	A	4	2
3	B	4	2
3	C	4	2
4	A	2	2
5	A	3	2
5	B	3	2
6	A	2	2
6	B	2	2
		36	22

Lighter No. is based on hold, cell, and tier. 2B-4 is hold 2, cell B, & tier 4.

There are 36 lighters in the hold and 22 lighters on deck. Since there is one lighter to a tier this amounts to a maximum total of 58 lighters to a ship. The lighter stowage table is spread over 3 pages. One page covers stowage of lighters in hold #2. One page is used to cover hold #3. The third page is used to show stowage of lighters in holds #4, 5 & 6.

Each page is broken into columns to show the lighter No., weight, L.C.G. from F.P., longitudinal moment, V.C.G. above B.L., vertical moment, T.C.G. off C.L., transverse moment and a column for remarks.

The L.C.G. from F.P. and V.C.G. above B.L. are fixed and plugged in to the sheet. These centroids are based on the weight of the lighter and an assumed full load cargo weight stowed at the geometric center of the lighter cargo space. As a result of the calculation of the V.C.G. in this manner, the V.C.G. will in most cases be higher than it actually is. In consequence of this, a built in margin of safety is introduced. The T.C.G. and transverse moment are used only when it is known that the lighter has a transverse center of gravity off the ℄. The transverse center of gravity, if it exists, will be furnished along with the weight of the lighter. The lighter is built symmetrical to its C.L. and mid length. The lighter will be stowed with its mid length coinciding with the ship's C.L. The loaded lighter will only have a T.C.G. off the ship's C.L. when the cargo stowed in the lighter is not stowed symmetrical with the mid length of the lighter.

Utilization of the blank lighter stowage table sheets is an extremely accurate method of calculating lighter cargo loading. It is extremely time consuming as there is a possibility in a full cargo condition of having to perform the following operations:

174 multiplications
addition of 3 columns each containing possibly 174 items
3 divisions

In addition, 58 weights will have to be entered and a range of 0-58 T.C.G.'s will also have to be entered.

Advantages

1. Permanent record.
2. Minimum penalty to ship.
3. Results can be worked up during loading.

Disadvantages

1. Time consuming.

2. Possibility of arithmetical errors.

3. Stability, heel, trim, and longitudinal strength condition not known until completion of loading.

Questions

1. What does the lighter number denote?

2. Does the empty lighter have a T.C.G.?

3. Where is the loaded lighter VCG and LCG assumed to be located?

4. Is there any exception to question 3?

5. When the lighter is stowed where will empty L.C.B. be in relation to ships ℄?

6. Is there generally a built in margin of safety in the loaded lighter's VCG as listed in the table?

7. What is the maximum load that can be carried in a lighter?

21 TRIM & STABILITY SHEET – (LONG FORM)

Explanation of Trim & Stability Sheet

The trim & stability sheet is the most accurate method of calculating the following vessel data:

displacement
vertical center of gravity
longitudinal center of gravity
transverse center of gravity (optional)
draft at L.C.F.
trim
G.M.t (uncorrected) available
total free surface correction
G.M.t (corrected) available
G.M.t margin

The advantages of this method are the following:

most accurate
minimum stability penalty to ship
all data contained within trim & stability book
blank forms & work sheets containing VCGs & LCGs can be made up by copying blank sheets in T & S book
built in stability margin of safety
permanent record that can be checked

The disadvantages are as follows:

time consuming
possibility of arithmetical error

Other methods of calculating vessel stability are the following:

short form (nomagram)
stabiloguage (mechanical)
stalodicator & lodicator (electronic)

The trim & stability sheet as contained in the T&S book consists of summary sheets and worksheets. The worksheets will be used for calculating the following:

containers
barges
liquids
consumables

The container & barge work sheets will list & tally them according to tiers. In the first group will be tier 1 (or the lowest tier). The size, number, & total weight for tier 1 will be shown for each hold. The V.C.G's & LCG's will be printed on the sheet. The total number of containers, weight, VCG, & LCG will be calculated for tier 1. Tier's 2, 3, 4, 5, 6 etc in hold and tiers 1, 2, 3, etc. on deck will then be tallied. A total for all of these groups will then be arrived at.

The liquid work sheets will group tanks as to the liquids they will carry such as:

salt water ballast tanks
fuel oil & diesel oil tanks
fresh water tanks
miscellaneous tanks

Stores and provisions may also be calculated on this sheet or may be calculated on a separate sheet. The blank work sheet will list tanks, locations, VCG's and LCG's. Blank columns will be available for entering % full, barrels, gallons, weight in long tons, and free surface. Vertical moment and longitudinal moment columns will be shown blank and available for calculating moments. Instructions for calculation of vessel's stability & trim (long form) will be included in the instructions in the front of the Trim and Stability book.

Procedure

1. In determining the ship's trim and stability for a specific condition of loading, the detail weights for individual categories such as cargo, fuel oil, fresh water, ballast, & lube oil are entered on the separate detailed sheets. As an example pages 11, 12, 13 & 14 in the 68d trim & stability book.

The pages are utilized as follows:

page 11 diagram of container stowage
page 12 container stowage calculation sheet
page 13 tankage calculation sheet
page 14 stability condition sheet (summary)

The VCG's and LCG's for containers and consumables are printed on pages 12 and 13. Appropriate free surfaces for the settlers and for each storage tank containing consumable liquids which is not pressed up shall be entered from the table on page 10. "Slack" free surface shall be entered for the settlers. The "slack" free surface entered for the consumable liquid storage tank shall result in a sum not less than the tank pair values which are the largest, for each type of consumable liquid on board. This requirement will allow use of the vessel's tankage in any order desired without undetected low stability due to free surface occurring at any time during the voyage. All other 98% full fuel oil tanks shall have 98%-5° heel free surface entered for them. In the separate detail loading

tables, each category is summed with respect to tonnage, vertical moment, longitudinal moment and free surface.

2. The Stability Condition sheet (summary) finally sums the tonnage, vertical moment, longitudinal moment, and free surface results obtained above and includes appropriate lightship values suitably increased for stores, crew, and passengers. The total tonnage obtained is the vessels loaded displacement. The loaded vessel's KG and LCG are determined by dividing the total vertical and longitudinal moment summations, respectively, by displacement. The mean draft corresponding to total displacement is read from the table of Hydrostatics (page #6-68d T&S book) together with the transverse KM, moment to trim 1″, LCF, and LCB. These values are entered on the stability condition sheet. The KG subtracted from KM gives the GMt of the vessel uncorrected for free surface. The free surface correction is obtained by dividing the total free surface by the total displacement and is subtracted from the uncorrected GMt to arrive at the corrected available GMt.

3. The distance between the vessels LCG and LCB is the trim lever. The product of displacement by trim lever is the moment causing the vessel to trim. When such moment is divided by the "Moment to Trim one inch" (as found from the Hydrostatics Page #6-68d T&S book) the vessels total trim as measured on perpendiculars is determined. (When LCG is aft of LCB, the vessel trims aft and vice versa.) The decimal portion of this trim to be applied to the aft perpendicular is obtained by dividing the distance from aft perpendiculars to the LCF by the length between perpendiculars. The remainder of the total trim is applied at the forward perpendicular. Drafts on perpendiculars are found by applying these decimal trims to the mean draft corresponding to displacement involved.

4. Vertical and longitudinal centers of gravity of containers are as shown on the container loading table, page 12. (68d T&S book)

Problems

1. Using C7-S-68d Trim and Stability Book calculate a departure ½ cargo, ½ fuel oil, ½ stores, and full SW ballast condition — assume:

All 20′ containers in hold weight 6 tons
All 40′ containers in hold weight 12 tons
All 20′ containers on deck weight 4.65 tons
fore peak and aft peak tanks empty
stabilization tanks same as for "arrival
full cargo 10% consumable" – condition
stores at 25 tons 40.0′ VCG & 500.4′ LCG
l't. displ. 12,036 tons 36.39′ VCG & 359.08′ LCG
(note: assume all fuel oil tanks @ 98% full. Select tanks so that approx. ½ of full fuel oil tonnage is met.)

2. In the above problem determine minimum S.W ballast that is necessary to meet GMt required curve with a 0.17′ margin.

3. Calculate a 68d arrival condition with no cargo, 25% fuel oil & stores, 100% feed water, 25% potable water, stabilization tanks at operating level, and ballast as required to meet GMt required curve with a 0.17′ margin. Use 68d Trim and Stability book.

22 LONGITUDINAL STRENGTH

In recent years it has been quite apparent that cargo ships have been increasing in length and breadth. In consequence of this the ship's longitudinal strength must be considered, as well as the stability for safe operation.

A floating ship may be regarded as a loaded beam or to be more exact a box girder. The big difference between this and many other structural beam problems is that not only do the loads change but the supports also change.

A ship is supported by the medium in which it is suspended i.e. sea water.

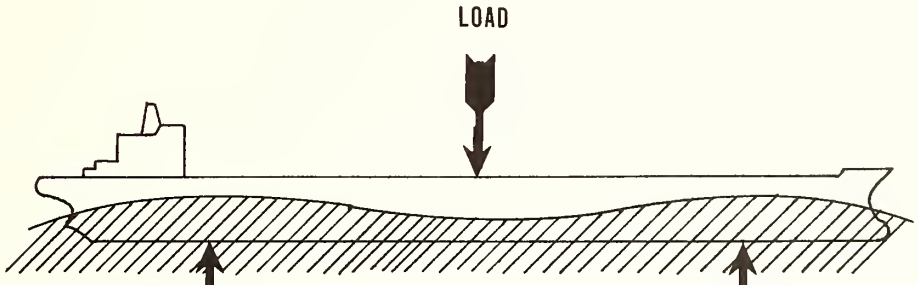

Figure 42

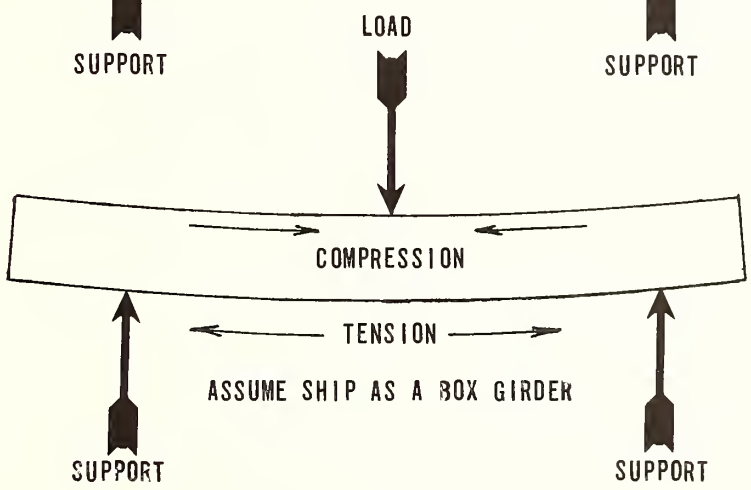

Figure 43

In the above sketch the ship's supports may be said to be located at the extremities. The upper surface of the ship or box girder is in compression and the lower surface is in tension.

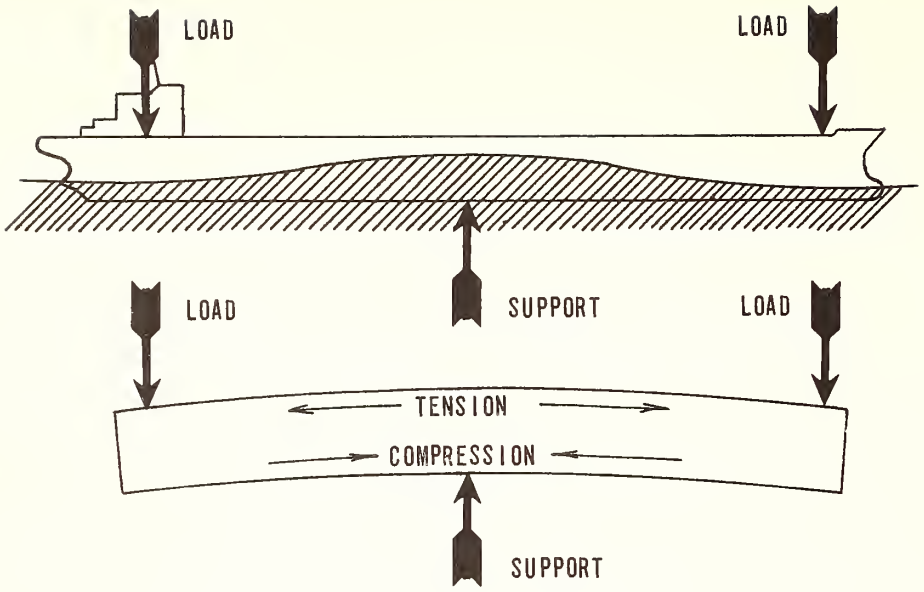

Figure 44

Figure 45

In this sketch the box girder's (ship) upper surface is in tension and the lower surface is in compression.

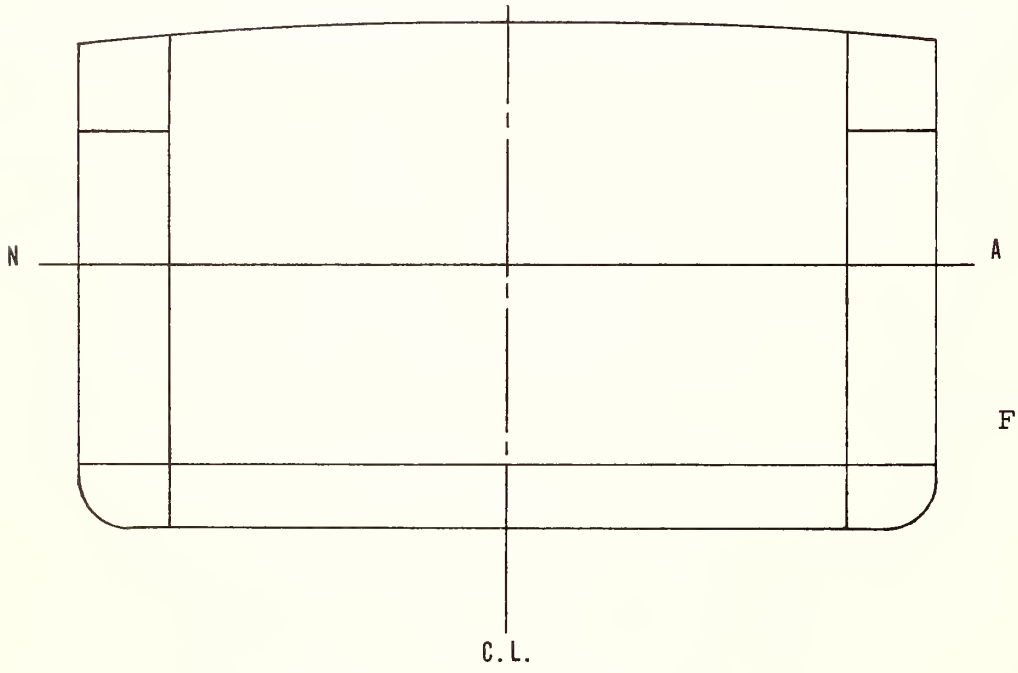

Figure 46

If we look at a section of the ship (beam or box girder) near the mid depth there will be neither compression or tension. This is called the neutral axis.

Why is longitudinal strength important?

If the ship is loaded so that the stress induced by bending moments exceeds the allowable, structural members may fail causing the ship to break in two.

What is a bending moment?

A bending moment is a load x a distance i.e. holding 5 lbs. is simple but holding it at arms length is more difficult.

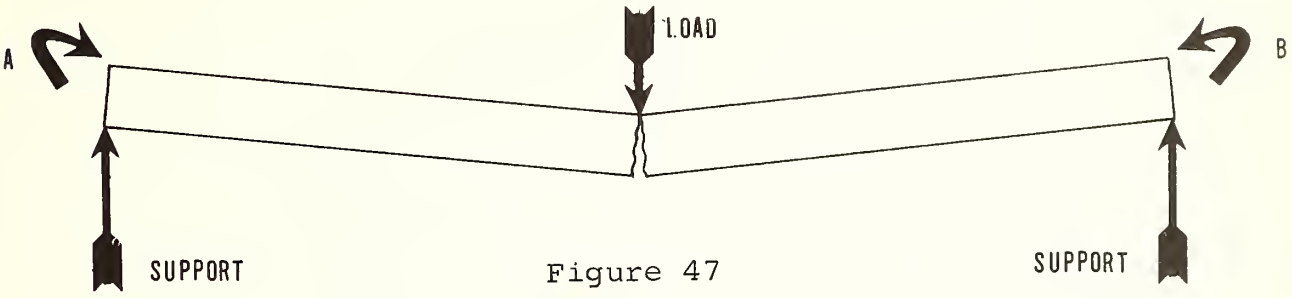

Figure 47

In other words the bending moment at the point of fracture in the above diagram is equal to the sum of the load x distance i.e. support load x distance.

If we take moments about the point of fracture the bending moment must be equal to the moment of the reaction at either end minus the moment of any loads that occur between that end and the section. In the loading of a ship at any given time to calculate the bending moment at any point would be complicated and time consuming. There are, however, electronic devices that will perform this calculation very quickly.

Shear is a result of the unequal distribution of loads and supports, and it acts vertically.

Trim & Stability Book — C5-S-78a

This book has a method of quickly and accurately calculating Bending Moments. Basically the system is as follows:

1. There is a Weight Factor diagram and a Bending Moment Numeral table.

2. For this particular ship the Bending Moment Numeral of 100 corresponds to a Maximum Permissable Bending Moment of 221,000 foot-tons in still water.

3. The criterion of a safe Bending Moment Numeral shall be as small as possible and shall never exceed "100" when the vessel is at sea.

To calculate a loading calculation do as follows:

a. Divide all weights of cargo stores, fuel, water, etc. by 100 and enter the items on the appropriate line in Column A of a blank Bending Moment Table. (All weight values are in long tons).

b. Multiply the items in Column A by their adjacent factors (from weight factor table) and enter the products in Column B.

c. Enter the totals of Column A and B on the summary line. The sum of Column A is the displacement divided by 100. The sum of Column B is the Weight Numeral.

d. Interpolate the Buoyancy Numeral from the Buoyancy Numeral Table and enter the Buoyancy Numeral into Column B.

e. If the Weight Numeral is greater than the Buoyancy Numeral the ship is in a Hogging Condition.

f. If the Weight Numeral is less than Buoyancy Numeral the ship is in a Sagging Condition.

g. The difference between the Buoyancy and Weight Numerals is the resulting Bending Moment Numeral. A Bending Moment Numeral of less than 100 indicates an acceptable loading. The blank form will have weight factors for all cargo tank and store locations. This will be used for most loading problems. Where a large concentrated weight is loaded or discharged the Weight Factors may be measured from Weight Factor diagram.

Example: Calculate a Ballasted No Cargo 100% Consumables condition on the C5-S-78a as follows:

D.B. & C.D. 1F	100% F.W.
D.B. & C.D. 1A	100% F.W.
D.B. & C.D. 2F P/S	100% F.W.
D.B. & C.D. 2A P/S	100% F.W.
E.R. D.B. Aft P/S	100% F.W.
Potable Water	100% F.W.
Dist. Water	100% F.W.
D.B. #6 1B P/S	98% F.O.
E.R. D.B. F C/L	98% F.O.
E.R. D.B. F P/S	98% F.O.
F.P.	100% S.W.
D.T. #1	98% F.O.
D.T. #3 P/S	98% F.O.
D.T. #4 P/S	98% F.O.
D.T. #5 P/S	98% F.O.
D.T. #6 P/S	98% F.O.
F.O. Sett. I.B. P&S	98% F.O.
F.O. Sett. O.B. P&S	98% F.O.
Crew & Effects	
Bos'n Stores Fwd	
Reefer & Dry Stores	
Bos'n Stores Aft	
A.P.	100% S.W.
D.T. #7	100% S.W.
D.T. #6	100% S.W.
L.O.	98% L.O.

Compartment	Column A Weight/100	Factor	Column B Numeral
Light Ship W/Ballast	122.86		296.9
Crew & Effects	0.10	3.38	0.3
Bosn's Store Fwd	0.36	5.99	2.2
Reefer & Dry Store	0.50	4.40	2.2
Bosn's Store Aft	0.14	6.40	0.9
D.B. & C.D. 1F	1.45	4.14	6.0
D.B. & C.D. 1A	1.40	3.64	5.1
D.B. & C.D. 2F P/S	2.58	3.06	7.9
D.B. & C.D. 2A P/S	2.62	2.45	6.4
E.R. D.B. Aft P/S	1.14	3.92	4.5
B&S C.D. 7 P/S	2.41	5.0	12.1
Pot. Water	2.00	2.69	5.4
Dist. Water	0.76	2.93	2.2
D.B. #6 I.B. P/S	3.60	2.18	7.8
E.R. D.B. F C/L	0.89	3.12	2.8
E.R. D.B. F P/S	0.76	3.08	2.3
Fore Peak	5.18	5.90	30.6
D.T. #1	4.62	4.89	22.6
D.T. #3 P/S	4.99	1.46	7.3
D.T. #4 P/S	3.35	0.27	0.9
D.T. #5 P/S	3.61	0.92	3.3
D.T. #6 P/S	3.12	2.01	6.3
F.O. Sett. I.B. P/S	2.08	2.69	5.6
F.O. Sett. O.B. P/S	2.01	2.69	5.4
A.P.	1.74	5.67	9.9
D.T. #6 P/S	3.39	2.01	6.8
D.T. #7 P/S	6.25	4.97	31.1
L.O.	0.15	3.76	0.6
	184.06		495.4
Buoyancy Numeral			380.8
Resulting Bending Moment Numeral			114.6

This is an unsatisfactory loading condition in regard to longitudinal strength.

If we do not load S.W. ballast in D.T.'s #6 P/S and #7 P/S the results will be as follows:

Column A	184.06	Column B	495.4
D.T. # P&S	-3.39		-6.8
D.T. #7 P&S	-9.64		-31.1
	174.42		457.5
			-363.0
			94.5

This is satisfactory loading from a longitudinal strength viewpoint.

The Buoyancy Numeral is an upward force and is deducted from the Column "B" total to arrive at a Resulting Bending Moment.

If the Resulting Bending Moment Numeral is unsatisfactory (i.e. exceeds 100) it can be made satisfactory by shifting liquids or cargo from the extremities of the ship. Because ships are becoming wider and longer "Longitudinal Strength" is becoming more of a problem on ships. This problem is further complicated by quick turn arounds. It, therefore, is now part of the duties of deck officers on many ships to calculate and check continuously the longitudinal strength as well as the transverse stability.

Bibliography

1. C5-S-78a Trim & Stability Book

2. Chapter VIII Standard Longitudinal Strength Calculation—"Introduction to Naval Architecture" by Comstock

3. Chapter IV—Strength of Ships—Principles of Naval Architecture—SNAME

Questions

1. What are the two (2) assumptions regarding location of supports for a ship among waves?

2. What structural member may a loaded ship be likened to?

3. (a) When the supports are assumed at the extremities are upper longitudinals assumed to be in tension or compression.

   (b) the lower longitudinals?

4. (a) When the support is assumed amidships are the upper longitudinals assumed to be in tension or compression?

   (b) the lower longitudinals?

5. Is there tension, compression or neither at the neutral axis?

6. Why is longitudinal strength of concern to the ship's officer?

7. Why is longitudinal strength becoming more of a problem on cargo ships?

8. Describe a bending moment?

9. What is shear?

10. How may longitudinal strength be calculated by the ship's officer?

Problems

1. Using the C5-S-78a Trim & Stability Book determine the "Bending Moment Numeral" of a ship of this class in a "Ballasted, No Cargo 50% Consumables Condition" + 100% salt water in the following tanks:

After Peak
Deep Tank #5 P&S
Deep Tank #6 P&S
Deep Tank #7 P&S

If the "Bending Moment Numeral" exceeds 100 determine what tanks should be emptied to arrive at a Bending Moment Numeral under 100.

23 SHORT FORM (Z-NOMOGRAM)

Explanation—The short form that is included in the Trim and Stability book is a requirement of the U.S.C.G. Section 93.10-1 of the Coast Guard Rules and Regulations for Cargo and Miscellaneous Vessels and states, in part,—information shall be prepared and furnished to the master.—This information shall be such that the master can, for any condition of loading by rapid and simple process, obtain accurate guidance as to the stability of the vessel.—This regulation requires the inclusion of a suitable short form for the calculation of a vessel's stability and freeboard in Trim and Stability booklets for general dry cargo vessels.

Purpose—The purpose of a short form is to assist the ship's officer in arriving quickly at a trim and stability solution with a minimum of hand calculations.

Types of Short Forms—The types of short forms are basically of 2 general formats:

1. The "Column" type which consists of the following:

a. Total cargo loaded in zones and addition of GMt due to Double Bottom loading vs displacement.

b. Reduction in GMt due to free surface.

c. Reduction in GMt due to deck load.

d. Summation of all of this data to obtain a GMT available.

Most column type short forms follow this format. Basically it is based on the fact that at a given displacement, loading or discharging cargo at a particular level has a specific percentage effect on the GMt.

2. **The "Z" Nomograph method** of calculating available GMt is as follows:

a. Calculate the tons in various zones.

b. Add total tons in zones to obtain deadweight.

c. Add deadweight to base ship to obtain displacement.

d. Lay straight edge across nomograph when displacement is known to obtain mean draft & GMt.

e. Determine stability factors by turning to appropriate zone nomograms. Lay a straight edge across the tons loaded (left hand scale) and displacement (canted scale). At the intersection on the right hand scale read the stability factor.

f. Calculate the algebraic sum of the stability factors and enter this value in the appropriate space on the tally sheet.

g. The algebraic sum of the base GMt and the net stability factor is the available GMt.

Similarity between "Column" and "Z" Nomograph short form methods

1. Use of vertical zones of cargo and liquid stowage.

2. Calculation of displacement by adding deadweight to base ship tonnage.

Differences between "Column" and "Z" Nomograph short form methods

1. GMt available in "Column" method is read from table and is based on total displacement vs double bottom tankage. In "Z" method Base Ship GMt is read from table of displacement vs. draft vs. GMt.

2. GMt available in "Column" method is a total of available GMt algebraic corrections for F/S, excess of high or low stowage of cargo, and deck cargo. In using "Z" method the nomograph for each zone when used generates a stability factor that is either negative or positive. This factor is not a multiplier but actually feet of GMt marked positive or negative.

3. No correction is necessary for normal F/S when using "Z" method. The table of total displacement vs GMt available includes an allowance for slack tank free surface for each type of consumable liquid, and F.O. tanks 98% full. If additional tanks have free surface then an additional free surface correction must be made.

Advantages of different short form methods

1. "Z" nomograph method has only addition and subtraction type of hand calculations versus the "Column" method's use of addition, subtraction, multiplication, and division calculations.

2. "Z" method has a nomograph for each zone and to obtain stability factor, only a straight edge will have to be used.

3. "Z" method will only require about 1/3 as many hand calculations.

4. Container and Lighter carrying ships have many zones of cargo loading. The operation is geared for a quick turn around. In the full load arrival condition these ships operate near their required GMt. The "Z" nomograph method is ideal for this operation because it is quick, has less chance for error, and leaves a permanent record of the loading.

We should like to say at this point their is nothing to take the place of the long form calculations, provided we have the following time conditions present:—

1. Time to calculate in full detail.

2. Time to have calculations checked.

Stability calculations performed by long form and "Z" nomograph or (other short form methods) will not generally obtain exactly the same results as the long form. The reasons for this are as follows:

1. Arbitrary assumptions as to zones of cargo loading. This results in a median VCG.

2. Arbitrary assumptions of F/S in the base ship condition.

3. Arbitrary assumptions of the following tonnages:

   crew and effects
   passengers
   non consumable stores
   consumable stores
   lube oil
   service tank liquids

Preparation of the "Z" Nomograph

Both the "Z" nomograph and Column method short forms must be tailored to the specific ship or class of ships.

The "Z" Nomograph method is prepared as follows:

1. **Calculate Base Ship**—This in general includes the following:—

   Lightship Displacement
   Crew and Effects
   Passengers
   Non Consumable Stores
   2/3 Consumable Stores
   Lube Oil
   Small Diesel Oil and other miscellaneous
   small service tanks
   Fixed Ballast

The resultant weight, center of gravity, and vertical moment are the operational lightship values to be used in the preparation of the nomograph.

2. **Free Surface Deductions**—Calculate and take the sum of the free surface moments as follows:—

Tank	Free Surface
a. Fuel Oil Settlers	Full Slack
b. Fuel Oil Stor. Tanks (use one of the following having the largest free surface)	
P'r of D.B. Tanks	Full Slack
C/L D.B. Tanks	" "
P'r of Deep Tank	" "
C/L Deep Tank	" "
c. All other F.O. D.B. Stor. Tanks	98%—5° heel
d. Clean Ballast Pressed up	0
e. Clean Ballast (if authorized to be carried slack by operating instructions)	See operating instructions for additional slack tanks
f. Fresh Water—For each system, select C/L tank or tank pair as in Fuel Oil Stor. tanks and handle the same way.	Full Slack
g. Distilled Water	Full Slack
h. All other F.W.D.B. tanks	0
i. All other F.W. deep tanks	0
j. Peak Tanks	See appropriate system
k. Liquid Cargo Tanks (when a C/L or pair of cargo tanks are authorized slack in the operating instructions treat as in item (b))	Full or Slack
l. All other liquid cargo tanks	98%—5° heel
m. Flume Tanks	Since flume tanks have a large F/S correction when operating and may or may not be used depending upon operating conditions, the flume tanks are best handled as a separate zone. Since the free surface correction varies directly with

displacement a graph of free surface correction varies directly with displacement, a graph of free surface factor vs. displacement will provide a handy presentation of data, while the weight of liquid in the tank can be treated as a simple zone weight.

3. **Stability Factor**—The product of the zone lever and the sum of weight in each zone represents a change in the vertical moment of the vessel, which in turn changes the location of the center of gravity. Since the location of the metacenter remains unchanged for a movement of weight, the moment of the center of gravity also represents the change in GMt. The change in GMt resulting from the weight of cargo or liquid added in a particular zone is called a stability factor, which is determined from the relationship:

$$\text{Stability Factor} = \frac{(\text{Weight in Zone}) \times (\text{Zone Lever})}{\text{total displacement}}$$

The stability factor is calculated for a range of operational displacements taking convenient increments of weight. The results should be presented in tabular form to be useful in the operation of the Z nomographs.

4. **Z Nomograph**—The Z nomograph is a simple and practical way of presenting the corrections to GMt which are generated by the relocation of weights to their actual zone KG's. Its use eliminates the necessity for multiplication and division, and permits visual in lieu of numerical interpolation. It has the added advantage of linear scales whereby an increment of length representing, say 100 tons of cargo or 0.1 foot of GMt remains the same throughout the range of the scale. The nomograph solves the equation.

$$\text{Stability Factor (i.e. change to GMT of basic ship)} = \frac{\text{Tons Loaded} \times (\text{KGbs} - \text{KG zone})}{\text{total displacement}}$$

zone lever or

Note: KGbs is KG basic ship

Since KG zone is a step variable, a separate nomograph is required for each zone.

To prepare a Z nomograph lay out two parallel lines and cross with a third line canted at 45° as shown in Figure 48.

Tons loaded scale	Displacement Scale	Stability Factor Scale

Tons Loaded Scale—The left hand line will be the scale for tons loaded in the particular zone. The calibration of this scale is based upon the following considerations:

a. The lower intersection is always the zero reference point for the scale.

b. The range of the scale is based upon the anticipated maximum load that can be accommodated in the zone. For example, if a zone consists solely of 2745 tons—then an appropriate range for the scale would be 0-3000 tons.

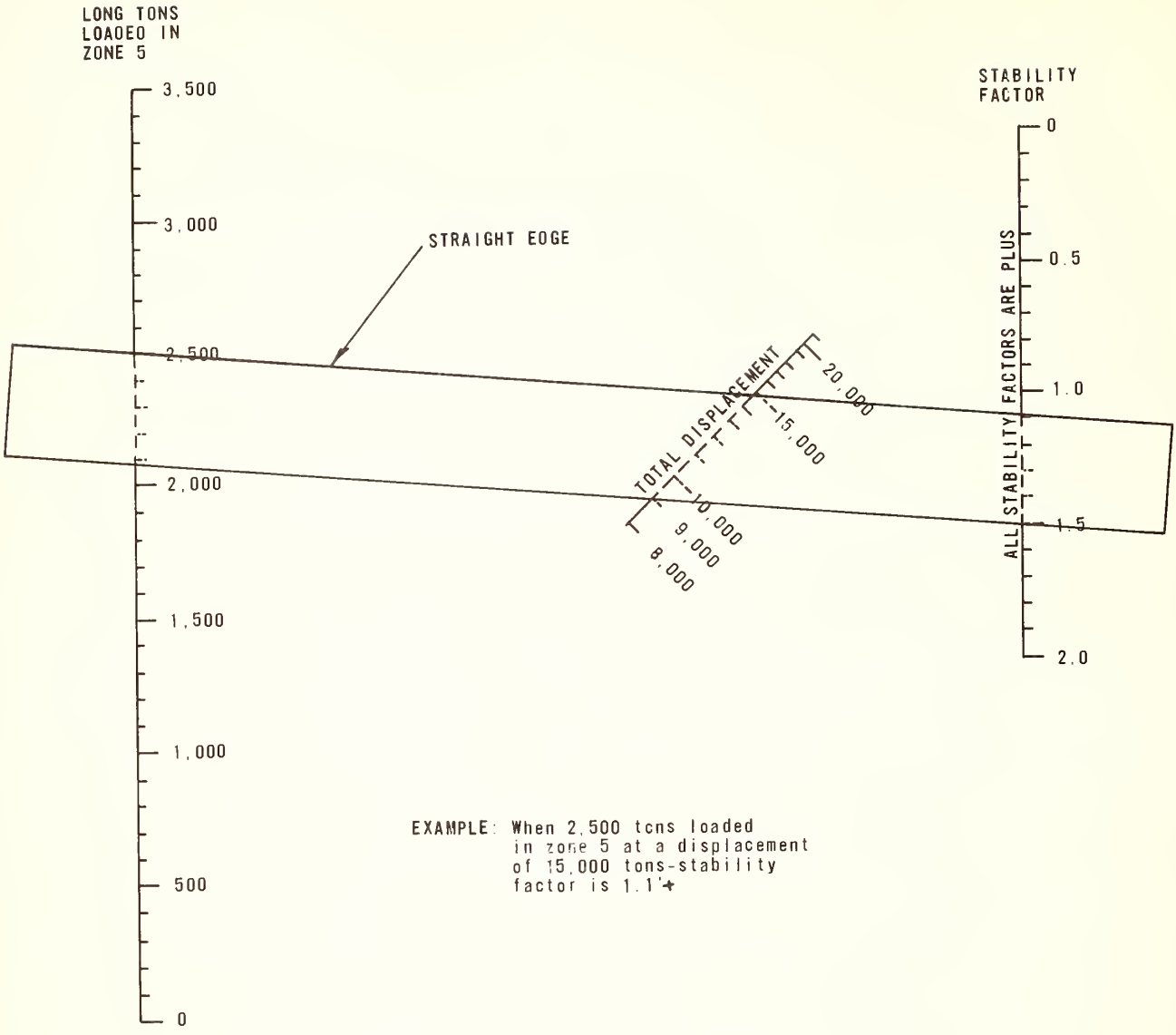

ZONE 5

FIGURE 48

c. The scale divisions are linear and should be chosen on the basis of convenient length of line for reading and the range of the scale. The subdivisions of the scale should be decimal.

Stability Factor Scale—The right hand line will be the scale of stability factors. The calibration of this scale is based upon the following considerations:

a. The upper intersection is always the zero reference point for the scale.

b. The range of the scale is based on the maximum anticipated stability factor which can be generated for the particular zone. A few check calculations varying x in the following equation will identify the maximum stability factor:

$$\text{Stability Factor} = \frac{(\text{x tons loaded}) \times (\text{zone lever})}{(\text{basic ship displ.}) + \text{x}}$$

c. The scale calibration is linear and decimal. The sign of the stability factor must be clearly noted.

Displacement Scale—The canted line will be the scale of displacements. Its calibration is non linear and is not selected but derived:

a. The range should extend from lightship displacement to full load displacement.

b. The calibration is accomplished by solving the basic equation for a specific set of variables and then using the left and right scales as references to plot the solution, thereby establishing a discrete point on the displacement scale. Additional displacement marks are obtained by repeating this process.

Presentation: The calculated data is presented in the Trim and Stability Booklet as follows:—

Instruction sheets
Short Form calculation sheet
Basic GMt tabulation sheet
Nomographs
Short Form example

Short Form Calculation Sheet

a. Separate cargo or liquids actually loaded into appropriate zones with provisions for the departure and arrival conditions.

b. Use Deadweight Summary Table for various conditions. Enter total tonnage into appropriate zones. Enter the appropriate stability factor for tonnage loaded in each zone. Determine algebraic sum of stability factors.

c. Summarize Displacement by summing Basic Ship Displacement (a constant) and total deadweight in the specific condition.

d. Record departure and arrival mean drafts in appropriate spaces.

e. Summarize stability in appropriate spaces with regard to the following:

Basic GMt
Net Stability Factor
Available GMt
Required GMt

Basic GMt Tabulation Sheet—Basic GMt is read off for appropriate displacement and mean draft. **Nomographs** are provided for each zone. (Different nomographs may be provided for the same zone for different cargoes whenever this added refinement is considered beneficial)

Conclusion—This has been a rather lengthy detailed section of the course. The ability to use the Short Form is the very essence of utilizing the Trim & Stability Book in fast turn around container and barge carrier operations. It is good to remember that the results obtained with the short form will not necessarily agree with the long form because of minor variations between actual and assumed values of items contained in basic displacement.

Problems

1. Using C8-S-81b Stability Booklet and by means of Short Form method calculate Total Displacement, GMt (uncorrected), Free Surface Correction, available GMt, Required GMt, Drafts at Marks for following conditions:—

a. Departure 100% Cargo, 100% Consumables
b. Arrival 100% Cargo, 10% Consumables
c. Departure 50% Cargo, 100% Consumables
d. Arrival 50% Cargo, 10% Consumables
e. Departure 0% Cargo, 100% Consumables
f. Arrival 0% Cargo, 10% Consumables

Bibliography

1. U.S.C.G. Navigation and Vessel Inspection Circular No. 3-69—Z Nomograph Method of Calculating Available GMt.

2. C8-S-81b Trim and Stability Booklet

3. C7-S-68c Trim and Stability Booklet

4. U.S.C.G. sample Trim and Stability Booklet

PROBLEM SOLUTION

PART III – 24 MECHANICAL & ELECTRONIC STABILITY & LONGITUDINAL STRENGTH CALCULATORS

Stability, trim, and longitudinal strength are real problems on container and barge carrying ships. The reasons for this are the following:

1. Quick turn around.

2. All containers & lighters look the same–the loading can no longer be eyeballed i.e., 2/3 in the lower hold, 1/3 in the tween decks.

3. The loading is vertical i.e., not all holds working simultaneously but each hold in turn being loaded vertically.

4. These ships almost always have deck loads and in the Full Load Arrival condition stability is frequently marginal.

5. Utilization of flume tanks requires accurate stability data at all times throughout the voyage.

6. Draft and trim data will have to be accurately known to sail into newly developed container & barge terminals where the channels have been dredged or artificially created.

Some of the methods of calculating stability, draft, trim, and longitudinal strength other than by hand calculations and nomogram are the following:

1. Stabilogauge–American Hydromath Co.–mechanical/electronic.

2. Trim & Stability Calculator–Sperry Rand–electronic.

3. Shore Based Computer System–Hydronautics.

4. Stalodicator S5-Gotaverken–electric.

There are other mechanical and electrical methods of performing these calculations and new devices are sure to be forthcoming in the future. The above devices and systems are known in this country at this time and cover a broad spectrum of methodology.

Stabilogauge–Most ship's officers are familiar with this device. They have generally been involved with them in their careers.

Basically this device is a calculating device, rectangular in shape, mechanical in operation with micrometer dials and gauges with movable pointers. Each stabilogauge is tailored to a specific ship or class of ships.

The "Stabilogauge" instantly determines the mean draft, displacement, deadweight, and stability which the ship will have under any condition of loading or at any time during a voyage.

The actuators (thimbles) are set to the actual condition of loading and the indicators on the gauges show mean draft, displacement, deadweight, metacentric height (GMt). The actuators on the right side are set to represent total loading on a level. The actuators on the left side are set to correct for free surface, and density. The GMt as read from the gauge if it is not adequate for damaged stability will be accompanied with a red flag.

Trim & Stability Calculator—This is an electronic device designed by Sperry. Like the Stabilogauge it is tailored to a specific ship. This device is set in a stand up console. On the front of the console is marked a profile of the specific ship laid out for compartments, levels, tanks, double bottoms, store rooms etc. In each of these spaces is located a potentiometer. In the case of spaces that could have a free surface a 2nd "pot" is located. The loading including density and free surface corrections is accomplished by turning the "pots" to the equivalent loadings and corrections.

This device will produce the following results:

Draft
trim
displacement
deadweight
GMt
sheer
bending moment

Shore Based Computer Program—This is a computer program located at a shore installation. It was designed specifically for container ships. The computer determines and regulates the loading. The computer program will also furnish required information through out the voyage by means of data forwarded by radio. The results are then transmitted back to the ship in the same way. The discharge and loading operations in the out ports may also be controlled in this way. This device will produce the same results as the previously mentioned devices. There is one distinct advantage however because when a computer is used the absolute optimum loading plan can be generated. The program is capable of generating infinite combinations of loading until the optimum loading plan has been reached.

Stalodicator S5—This instrument is designed specifically for containerships. It is basically an electric or electronic calculator. It has no connection to the ships hull and does not measure actual stresses. The instrument is fed with data concerning the loads in the ships holds, tanks, and store rooms. It gives a reading that indicates how the cargo, tankage and stores distribution will affect the hull.

The instruments are based on a simple principle (the Wheatstone bridge). The components consist mainly of fixed and variable resistances. There are no moving parts except the knobs for plugging in the loads.

Each instrument is tailored to a specific ship or class of ships. Each vertical container section in the ship is represented by a knob, while the horizontal tier of containers is represented in a special part of the apparatus designated "Section Calculation." The ship's officers set up on these knobs the tons of cargo allotted to each horizontal tier. The instruments gives an accurate indication of the moment for each section and these are transferred to the main section of the instrument. Weights of bunkers, ballast and stores are also fed into the instrument, together with corrections for free surface in tanks.

The Stalodicator S5 provides information as to draft, trim, deadweight, bending moment amidships and stability. The Stalodicator can readily be adapted to other uses. Some container ships have shipboard cranes which frequently will not operate satisfactorily at excessive angles of heel. The Stalodicator can be employed to indicate the maximum load that may be lifted by a crane without causing a predetermined angle of heel to be exceeded. Also, a check can be made to ensure that a proposed lift is within the safe stability limits for the ship.

Summary—Lighter and container carrying ships are turning to mechanical and electrical devices because of the following reasons:

1. quick turn around—shortage of time

2. use of flume tanks to keep ships from being too stiff—(stability must be known when tanks are operated)

3. minimal stability available in "Full Load Arrival" condition

4. longitudinal strength is a problem

5. ship based cranes are limited as to working efficiently when ship has a heel.

6. stability available to limit heel must be known under all conditions.

Questions

1. Which devices electric or mechanical has greatest reliability?

2. What is the advantage of shore based computer program?

3. What does Stalodicator S5 do that other shipboard devices do not do?

4. What special problem do lighter & barge carrying ships have in common with tankers?

25 PROBLEMS OF SHIP OPERATION

The Trim and Stability book is an instruction book and a tool. It provides a concentrated source of data for ship operation. It is also a tool that is to be used in problems that arise in ship operation such as:

loading cargo—effect on trim, draft, stability, longitudinal strength
discharging cargo—effect on trim, draft, stability, longitudinal strength
ballasting—effect on draft, trim, stability, longitudinal strength, rolling period
changing—rolling period—increasing or decreasing stability

The trim and Stability Book is also an instruction book with instructions in the following areas:

computation of vessel's stability and trim, long form and short form
cross connection–instructions
slack tanks–number permissable
bilges–condition of at all times
temporary reduction in GMt–during ballasting

The Trim and Stability Book is also a source of data such as:

light ship data
permanent ballast data
trim table
tank capacities and free surface table
GMt change due to ballasting
cargo stowage data tables
sample loading conditions–long form
short form-nomographs

All of the above information and data has been covered throughout this text. All that is intended here is a review before we start to solve problems utilizing all of the information in the Trim and Stability Book singly and in combination.

Problem 1

If the U.S. Lines S/S American Legion (C7-S-68c) is in the Arrival-Full Cargo–10% Consumables condition, determine how much ballast can be dumped before arriving in port and still remain stable.

a. If all liquid ballast was removed, how many 8 ton containers may still be carried on deck?

b. If the Roll Stabilization Tanks were dumped, what effect would this have on the stability in Arrival-Full Cargo–10% Consumables–condition?

c. What would the drafts be if all liquid ballast was removed and Roll Stabilization Tanks were emptied?

Problem 2

The S/S American Legion (C7-S-68c) leaving New York with Full Fuel Oil, Full Stores, and containers stowed in the tiers 1, 2, 3, and 4 the same as shown in the Full Load Departure condition i.e. 112-20′ containers @ 12 tons each and 142-40′ containers @ 24 tons each. The ship is bound for Baltimore to finish loading. Determine the quantity of liquid ballast needed to meet GMt required with a margin of 0.17′. Determine drafts and keep trim within 2′-4′ by stern. Use extra ballast, if necessary.

Problem 3

A C5-S-78a class vessel has loaded 222-40′ containers at 25 tons each. The loading is as shown for the 25 ton containers, 100% Cargo Oil and 100% Consumables except that 103 containers on deck

and the cargo oil will be loaded in Philadelphia. When leaving New York, it is desired to be as close to even keel as possible. Determine the following:

stability
draft
trim
longitudinal strength numeral

and the amount of salt water ballast required to meet the above conditions.

Problem 4

A C5-S-78a class vessel is departing from her last foreign port in the Full Load Condition with 325-40′-25 ton containers and 100% cargo oil. Upon arriving in New York she will have 10% consumables.

How many containers would have to be left on the dock and where would the balance of containers have to be stowed so that only 1,500 tons of salt water ballast stowed to advantage would result in a stable ship with 2′-4′ trim by stern and a longitudinal strength numeral of less than 100.

Problem 5

The S/S LASH ITALIA (C8-S-81b) has the following loading conditions shown in the Trim and Stability Book:

100% Cargo - Departure
100% Cargo - Arrival
50% Cargo - Departure
50% Cargo - Arrival
0% Cargo - Departure
0% Cargo - Arrival

All of these loading conditions are shown in the long form. Check these loading conditions by the short form and compare stability results.

Problem 6

The S/S American Lancer C7-S-68c is arriving in port in an "Arrival-Full Cargo-10% Consumables" condition. If the Roll Stabilization Tanks were dumped and all Fresh Water Tanks were pressed up, how much could the Salt Water Ballast be reduced and still have a stable ship?

Problem 7

The S/S American Legion C7-S-68c leaves Baltimore in the Full Cargo 10% Consumables condition. On the first day at sea the outboard 3 rows of containers on the 3rd tier on top of holds #4 and #5 are swept over the side. Assume the 18 containers are 28′ off center line and the vertical center of gravity of containers is 67.5′ above the base line. Assume weight of containers are 8 tons each.

a. What will the heel be as a result of the loss of the containers?

Problem 8

A Moore McCormack C5-S-78a ship is loaded with containers at a weight of 18 long tons each, 100% cargo oil and 10% consumables (as shown on Page 76).

a. What is the rolling period in this condition?

b. What will the rolling period be if the Anti Roll tank is dumped?

Problem 9

The C6-S-1w class ship the "S/S American Leader" is departing in a Ballast Condition with 11.31′ of trim by the stern.

a. What is the rolling period in this condition?

b. How much can we reduce trim by pressing up empty clean ballast tanks and fresh water tanks?

c. Determine the new KG, GMt, and rolling period.

Problem 10

The C6-S-1w class ship the "S/S American Leader" has permanent ballast stowed in the lower holds. If this permanent ballast was removed, could the ship carry containers on deck in the 100% Cargo-100% Consumables departure condition and still meet the stability requirements. If not could the ship carry a reduced number of containers and if so how many?

Bibliography:

C6-S-1w Trim and Stability Book
C7-S-68c Trim and Stability Book
C5-S-78a Trim and Stability Book
C8-S-81b Trim and Stability Book

PENN STATE UNIVERSITY LIBRARIES
A00007126533 9